Promat

The Passive Fire Protection Handbook

The UK's comprehensive guide to passive fire protection

Chapter 5 Partitions and External Walls

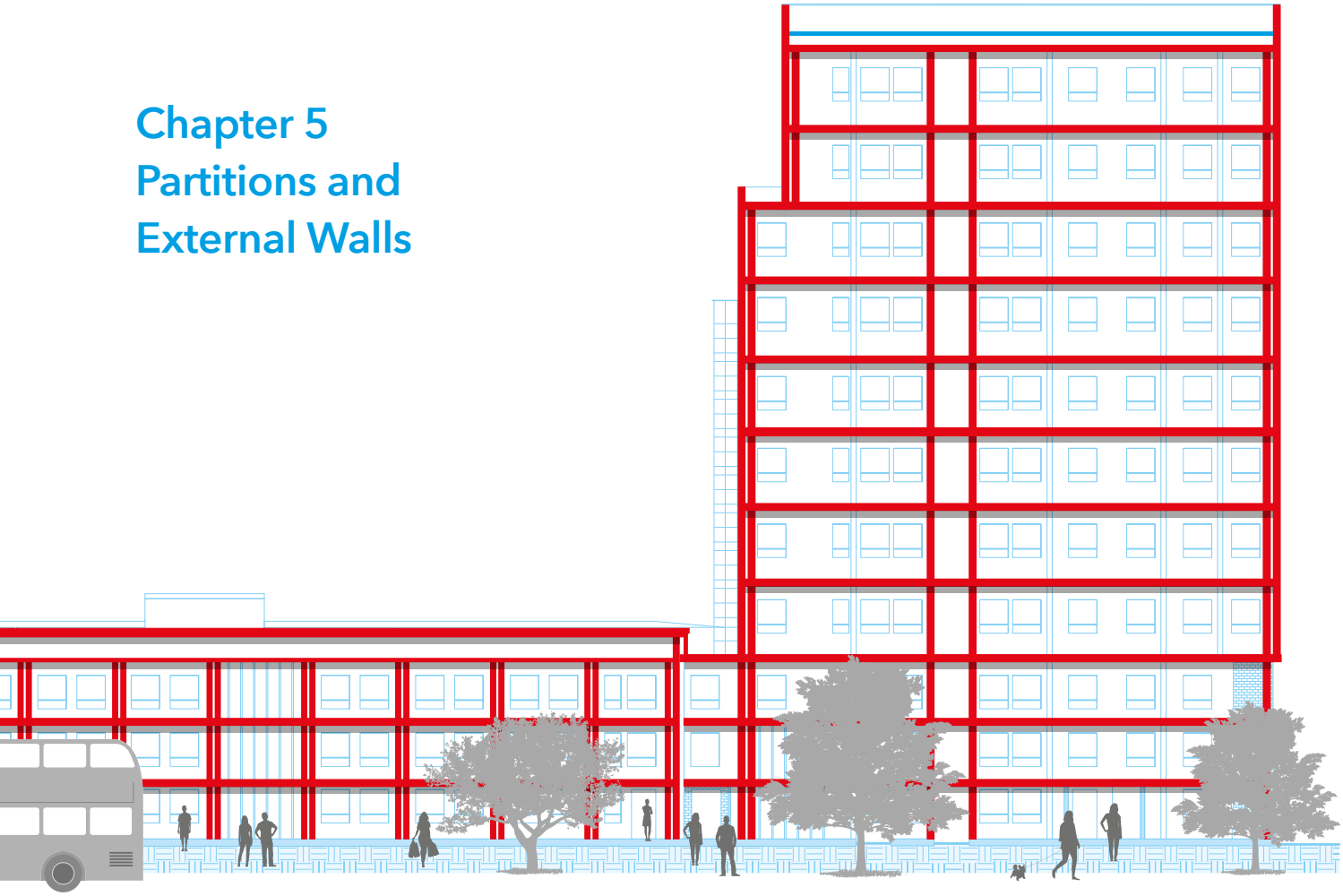

JUNE 2022

Please check that this is the current version by visiting the Promat website.
For archived versions please contact technical services.

etex inspiring ways of living

The Passive Fire Protection Handbook

Contents

Chapter 5: Partitions and External Walls 139
Introduction 140
Internal Partitions 142
DURASTEEL® Partitions and Barriers ... 158
External Walls 162

Partitions and External Walls

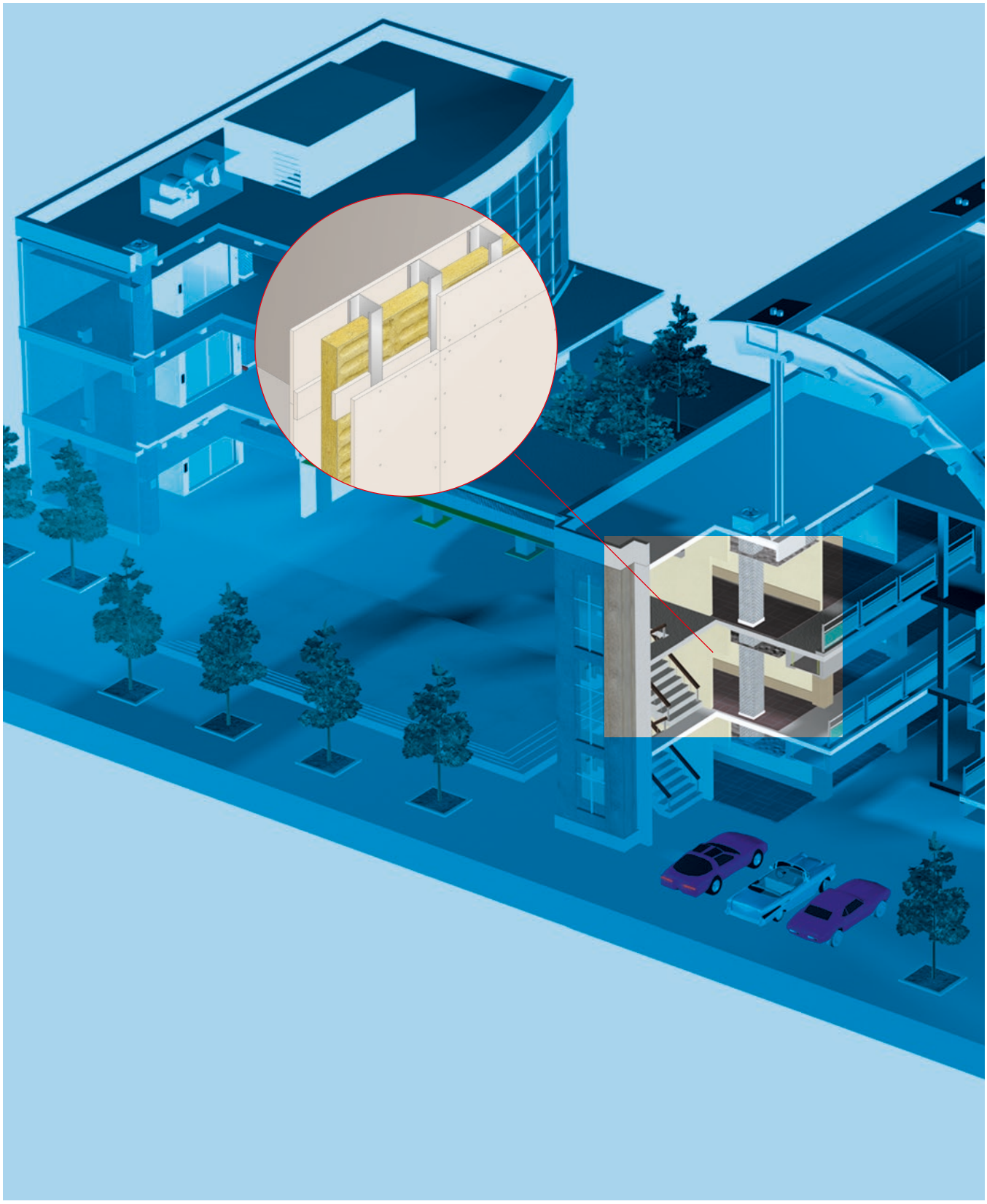

Chapter 5: Partitions and External Walls

Introduction

FIRE TESTING METHODS
Non-loadbearing partitions should normally be tested or assessed in accordance with BS 476: Part 22: 1987 for integrity and insulation when exposed to fire from either side. Loadbearing partitions (walls) should normally be tested or assessed in accordance with BS 476: Part 21: 1987 for loadbearing capacity, integrity and insulation.

Depending upon its situation and function within a building, a wall may be expected to fulfil different requirements in the event of fire. Fire resisting walls used for partitioning buildings and enclosing compartments will be required to provide a barrier to the passage of fire from one side or the other and must therefore be able to satisfy each of the relevant criteria (integrity, insulation and if the wall is loadbearing - loadbearing capacity) from either side for the prescribed period. Other situations arise where fire resistance is not required from both sides and where the construction may have to satisfy the criteria to different extents.

Loadbearing walls occasionally form part of the structural frame of a building without performing a separating function. In this event the construction would be judged only by the criteria of loadbearing capacity. Such a wall, while it may have to withstand the effect of fire from both sides at once, is difficult to test in existing designs of furnace which apply heat to only one side. Constructions which are satisfactory when tested from each side separately are not necessarily adequate when heated from both sides at the same time.

Adopting methods of computing fire resistance require careful consideration: the nature and thickness of facings; stud size and spacing; type, thickness/density and method of fixing cavity insulation; and loading conditions; are all important. Possible areas of weakness in walls are joints and junctions, method and type of fixings, charring of combustible framework and the expansion of metal studs.

PARTITIONS

General Design Considerations

The following points are some of the factors which should be considered when determining the correct specification to ensure a wall or partition will provide the required fire performance. Further advice can be obtained from Promat Technical Services Department.

1. Studwork
   The design of studwork should be adequate for the height and length of the partition. The studwork details given in the following specifications will be suitable up to the maximum heights stated. For greater heights the dimensions of the framing members could change depending on factors such as movement and deflection. Larger or more frequent frame sections will often improve the fire performance. Methods of calculating fire resistance of timber stud walls and joisted floor constructions are detailed in BS 5268: Section 4.2: 1990.

2. Compartmentation at Head of Wall
   The 2007 edition of Approved Document B discusses the need for fire protection at the head of compartment walls where they meet other fire resisting elements. It states that "Where a compartment wall or compartment floor meets another compartment wall or an external wall, the junction should maintain the fire resistance of the compartmentation". Please consult Promat UK Technical Services for further guidance on this issue.

3. Deflection
   Where differential movement is expected between the floor or beam above the construction, and the floor below, deflection head detail will be required to ensure undue stress is not placed upon the partition. Please consult Promat Technical Services Department for further details of the approved constructions. Some form of movement detail is also required to allow for the expansion of the studs under fire conditions.

4. Partition Length
   A vertical movement joint should be located at maximum 10m centres in long runs of partition. Please contact Promat Technical Services Department.
5. Loadbearing
   The examples given in this handbook are for non-loadbearing partitions. For loadbearing elements please consult Promat Technical Services Department.
6. Service Penetrations
   Care needs to be taken in detailing a suitable fire-stopping system around any penetrations in the partition by services to ensure:
   a) the fire-stopping material remains in situ
   b) fire and smoke do not penetrate the partition

   Allowance should be made for thermal movement of the services in both ambient and fire conditions to ensure loads are not applied to the partition. Further guidance on the sealing of service penetrations can be obtained in Chapter 7 of this handbook.
7. Light Switches and Electrical Sockets
   Additional protection may be required within the partition cavity around electrical fittings such as light switches.
8. Fire Doors and Glazing
   Tested or assessed doors and/or glazed assemblies should always be used. In most cases additional framework will be required to prevent loads being applied to the partition. Careful detailing is needed around the perimeter of any door or glazed assembly.
9. Protected Zones
   If a fire breaks out near the area where a compartment wall meets a roof, there is a risk that it will spread over the roof to the adjoining compartment. To reduce the risk, Approved Document B requires protection to be installed to a protected zone of the roof 1500mm either side of the compartment wall. However, for more onerous circumstances, the FPA Design Guide suggests a minimum of 2500mm, or up to 5000mm dependent upon the orientation of the ridge and the presence of a sprinkler system. Please contact Promat Technical Services for further guidance on protected zones.
10. Concealed Spaces
    Cavities in the construction of a building provide a ready route for smoke and flame spread. This is particularly so in the case of voids in, above and below the construction of a building, e.g. walls, floors, ceilings and roofs. Please consult Promat Technical Services for further information.
11. When considering the design of walls it is essential to bear in mind the section size of the steel framing in conjunction with the wind loading factors and expansion allowance, together with the height and span of the wall, to ensure that under both fire and ambient conditions the wall will provide the necessary design performance. Please consult Promat Technical Services Department for further information.
12. The framing for both insulated and uninsulated wall systems must be securely fixed back to a substrate that has an equal or greater fire performance than the designed wall. All fixings must be non-combustible.

Chapter 5: Partitions and External Walls

Internal Partitions

Warrington Assessment No WF 169604

Fig 5.10.1

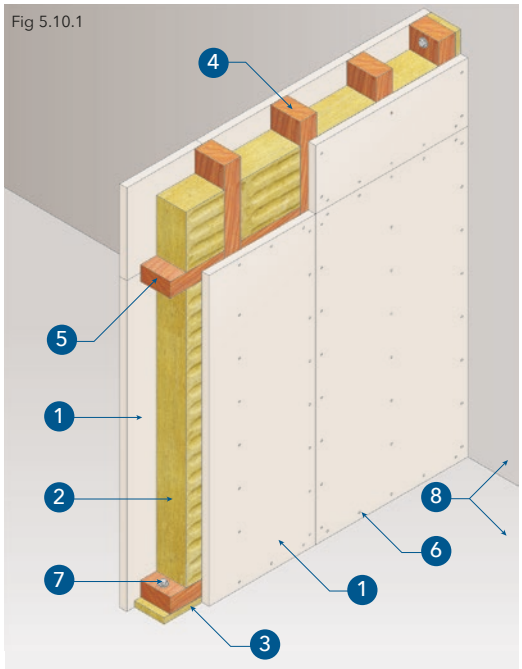

INTERNAL PARTITIONS – TIMBER STUDS

TECHNICAL DATA

30 minutes fire rating, integrity and insulation in accordance with the criteria of BS 476: Part 22: 1987.

Nominal thickness of partition: **75mm**

Maximum partition height: **4.0m**

Estimated sound insulation: **Rw 39dB**

1. Promat MASTERBOARD® boards, each side 6mm thick.
2. Rock wool minimum 60mm thick x 23 kg/m³.
3. Rock wool seal or PROMASEAL® Sealant.
4. Timber stud, 63mm x 50mm at maximum 610mm centres.
5. Timber nogging at horizontal board joints.
6. 38mm long round head nails or M4 x 38mm long steel woodscrews at nominal 300mm centres.
7. M6 steel anchor bolt at nominal 600mm centres.
8. Concrete wall or floor slab.

Certifire Approval No CF420A

Fig 5.10.2

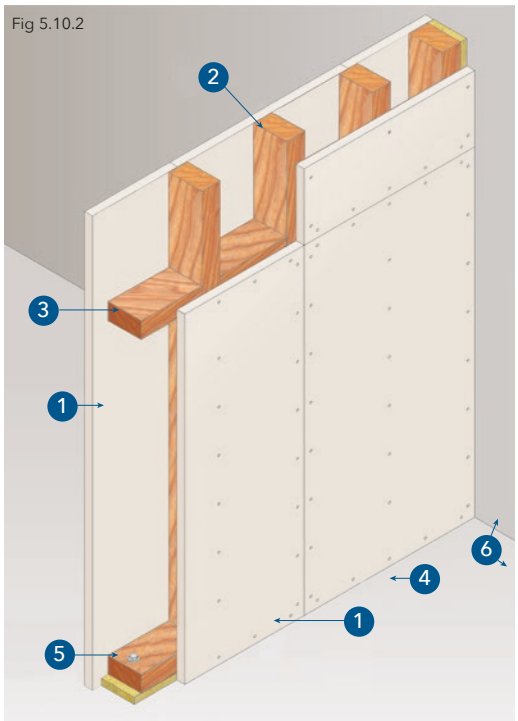

TECHNICAL DATA

30 minutes fire rating, integrity and insulation in accordance with the criteria of BS 476: Part 22: 1987.

Nominal thickness of partition: **81mm**

Maximum partition height **4.0m**

Estimated sound insulation: **Rw 34dB**

1. Promat SUPALUX® boards, each side 9mm thick. Boards are either butt jointed or flush jointed.
2. Timber stud, 63mm x 50mm at maximum 610mm centres.
3. Timber nogging at horizontal board joints.
4. 50mm long round head nails at nominal 300mm centres.
5. M6 steel anchor bolt at nominal 600mm centres.
6. Concrete wall or floor slab.

Note: Rock wool infill not required for fire resistance but may be included for acoustic or other reasons.

INTERNAL PARTITIONS – TIMBER STUDS

Certifire Approval No CF 420A

TECHNICAL DATA

60 minutes fire rating, integrity and insulation in accordance with the criteria of BS 476: Part 22: 1987.

Nominal thickness of partition: **81mm**

Maximum partition height **4.0m**

Estimated sound insulation: **Rw 41dB**

1. Promat SUPALUX® boards, each side 9mm thick. Boards are either butt jointed or flush jointed.
2. Rock wool, minimum 60mm thick x 23 kg/m³.
3. Rock wool seal or PROMASEAL® Sealant.
4. Timber stud, 63mm x 50mm at maximum 610mm centres.
5. Timber nogging at horizontal board joints.
6. 50mm long round head nails or M4 x 50mm screws at nominal 300mm centres.
7. M6 steel anchor bolt at nominal 600mm centres.
8. Concrete wall or floor slab.

Fig 5.10.3

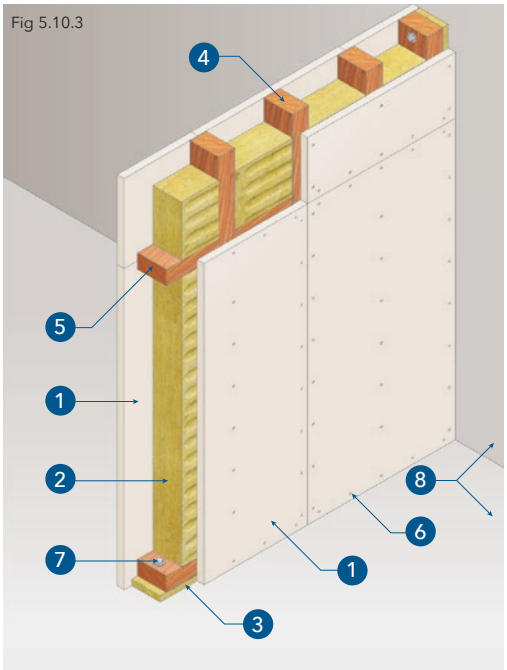

TECHNICAL DATA

90 minutes fire rating, integrity and insulation in accordance with the criteria of BS 476: Part 22: 1987.

Nominal thickness of partition: **81mm**

Maximum partition height **4.0m**

Estimated sound insulation: **Rw 43dB**

1. Promat SUPALUX® boards, each side 9mm thick. Boards are either butt jointed or flush jointed.
2. Rock wool, minimum 50mm thick x 100kg/m³.
3. Rock wool seal or PROMASEAL® Sealant.
4. Timber stud, 63mm x 50mm at maximum 610mm centres.
5. Timber nogging at horizontal board joints.
6. 50mm long round head nails at nominal 200mm centres or M4 x 50mm screws at nominal 300mm centres.
7. M6 steel anchor bolt at nominal 600mm centres.
8. Concrete wall or floor slab.

Fig 5.10.4

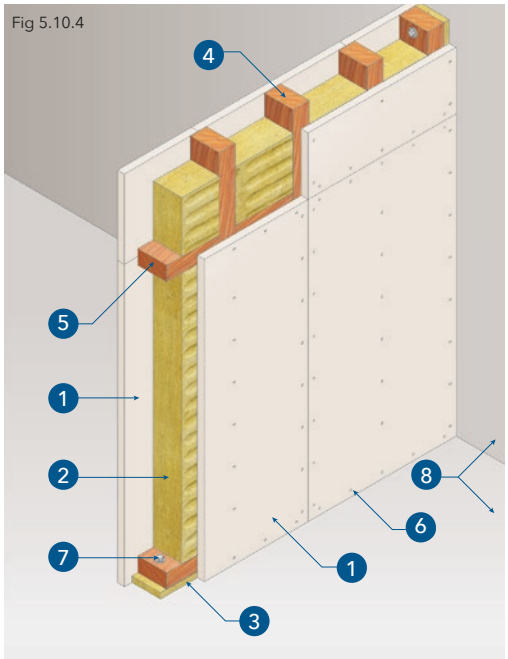

Certifire Approval No CF 420A

Fig 5.10.5

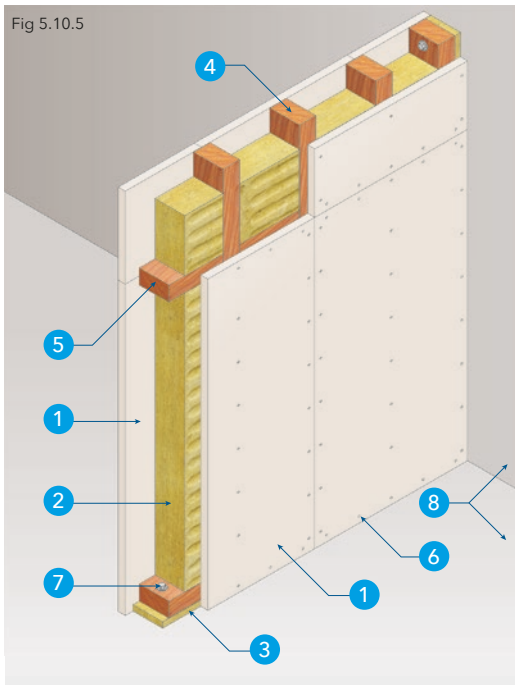

Fig 5.10.6

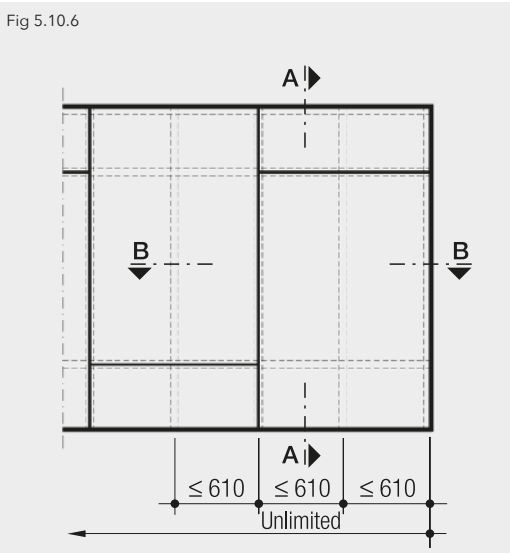

Elevation

INTERNAL PARTITIONS – TIMBER STUDS

TECHNICAL DATA

120 minutes fire rating, integrity and insulation in accordance with the criteria of BS 476: Part 22: 1987.

Nominal thickness of partition: **119mm**

Maximum partition height **4.0m**

Estimated sound insulation: **Rw 47dB**

1. Promat SUPALUX® boards, each side 15mm thick. Boards are either butt jointed or flush jointed.
2. Rock wool, minimum 80mm thick x 100 kg/m³ applied in 2 layers of 40mm thickness with all joints staggered by minimum 150mm between layers.
3. Rock wool seal, or PROMASEAL® Sealant.
4. Timber stud, 89mm x 50mm at maximum 610mm centres.
5. Timber nogging at horizontal board joints.
6. 63mm long round head nails at nominal 200mm centres or M4 x 63mm screws at nominal 300mm centres.
7. M6 steel anchor bolt at nominal 600mm centres.
8. Concrete wall or floor slab

Fig 5.10.7

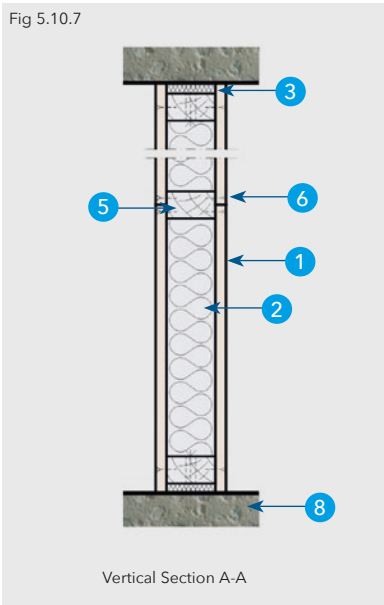

Vertical Section A-A

Fig 5.10.8

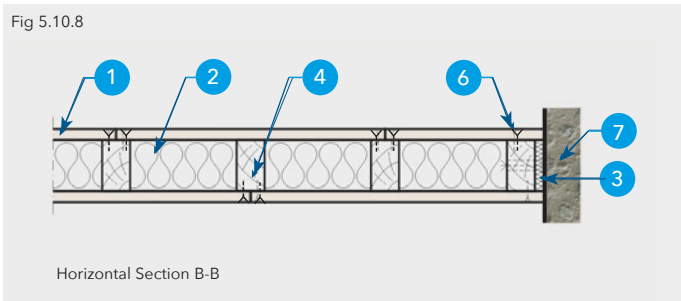

Horizontal Section B-B

INTERNAL PARTITIONS – STEEL STUDS

TECHNICAL DATA

30 minutes fire rating, integrity and insulation in accordance with the criteria of BS 476: Part 22: 1987.

Nominal thickness of partition: **72mm**

Estimated sound insulation: **Rw 40dB**

1. Promat MASTERBOARD® boards, each side 6mm thick
2. Promat MASTERBOARD® fillet/coverstrip each side 6mm thick, 50mm wide on steel studs and 75mm wide at horizontal joints. Coverstrips fastened using M4 x 16mm long self-tapping screws at nominal 300mm centres on both sides of the joint.
3. Rock wool, minimum 60mm thick x 23 kg/m³.
4. Rock wool seal or PROMASEAL® Sealant.
5. Steel stud, 48mm x 32/34mm x 0.5mm, at maximum 610mm centres.
6. Ceiling and floor steel channel, 50mm x 25mm x 0.5mm.
7. M4 x 25mm self-tapping screws at nominal 300mm centres.
8. M6 steel anchor bolt at nominal 600mm centres.
9. Concrete wall or floor slab.

Note: The above partition specification is approved for heights up to 3m using framing members as detailed. Alternative specifications are available for heights up to 10m. Contact Promat Technical Services Department for further details.

For Defection Head details please refer to pages 151-152.

Warrington Assessment No WF 169605

Fig 5.20.1

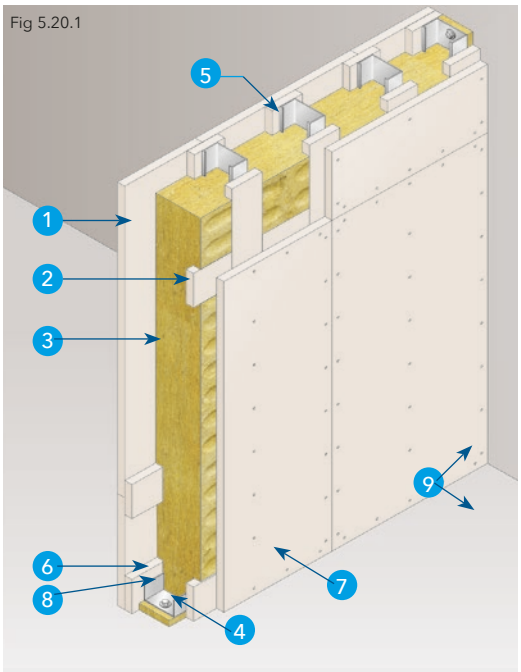

TECHNICAL DATA

30 minutes fire rating, integrity and insulation in accordance with the criteria of BS 476: Part 22: 1987.

Nominal thickness of partition: **66mm**

Estimated sound insulation: **Rw 43dB**

1. Promat SUPALUX® boards, each side 9mm thick. Boards are either butt jointed or flush jointed.
2. Promat SUPALUX® coverstrips 75mm wide x 9mm thick each side at horizontal board joints. Fastened using M4 x 16mm self-tapping screws at nominal 300mm centres on both sides of joint.
3. Rock wool, minimum 60mm thick x 23 kg/m³.
4. Rock wool seal or PROMASEAL® Sealant.
5. Steel stud, 48mm x 32/34mm x 0.5mm, at maximum 610mm centres.
6. Ceiling and floor steel channel, 50mm x 25mm x 0.5mm.
7. M4 x 25mm self-tapping screws at nominal 300mm centres.
8. M6 steel anchor bolt at nominal 600mm centres.
9. Concrete wall or floor slab.

Note: The above partition specification is approved for heights up to 3m using framing members as detailed. Alternative specifications are available for heights up to 10m. Contact Promat Technical Services Department for further details or refer to Certifire Certificate of Approval No. CF 420A.

For Defection Head details please refer to pages 151-152.

Certifire Approval No CF 420A

Fig 5.20.2

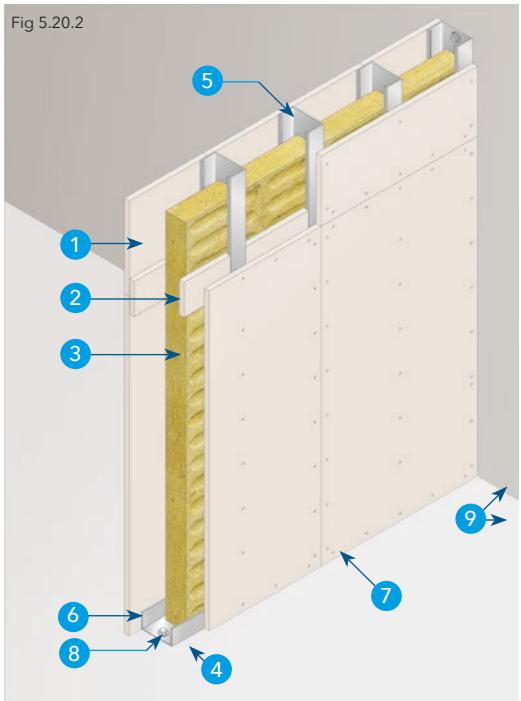

Certifire Approval No CF 420A

Fig 5.20.3

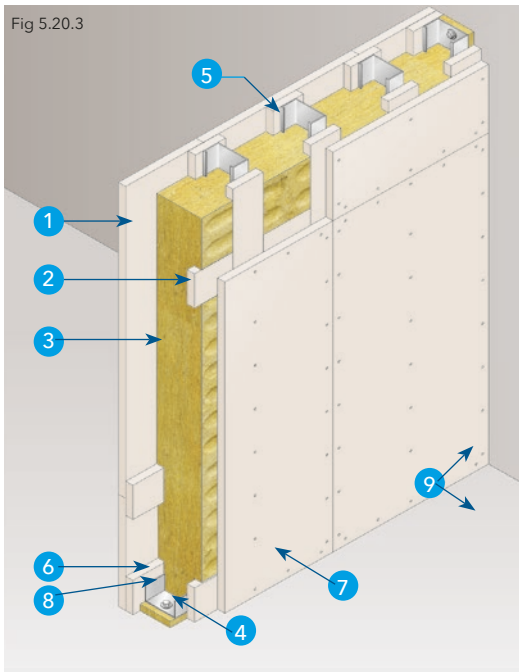

Fig 5.20.4

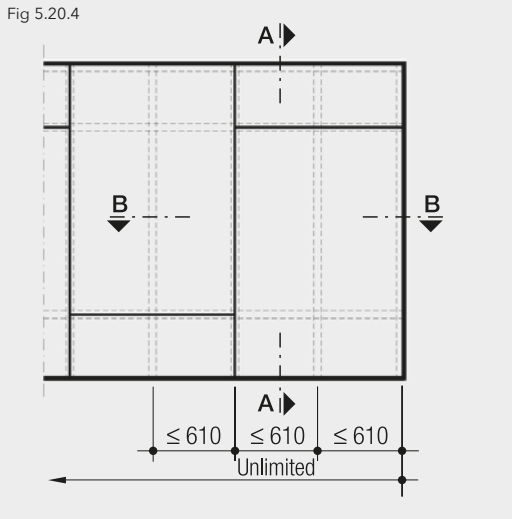

INTERNAL PARTITIONS - STEEL STUDS

TECHNICAL DATA

60 minutes fire rating, integrity and insulation in accordance with the criteria of BS 476: Part 22: 1987.

Nominal thickness of partition: **78mm**

Estimated sound insulation: **Rw 44dB**

1. Promat SUPALUX® boards, each side 9mm thick. Boards are either butt jointed or flush jointed.
2. Promat SUPALUX® fillet/coverstrip, 50mm wide, each side 6mm thick over studs and at horizontal board joints. Coverstrips at horizontal board joints fastened using M4 x 16mm long self-tapping screws at 300mm centres on both sides of the joint.
3. Rock wool, minimum 60mm thick x 23kg/m³, or 50mm thick x 40kg/m³.
4. Rock wool seal or PROMASEAL® Sealant.
5. Steel stud, 48mm x 32/34mm x 0.5mm, at maximum 610mm centres.
6. Ceiling and floor steel channel, 50mm x 25mm x 0.5mm.
7. M4 x 25mm self-tapping screws at nominal 300mm centres.
8. M6 steel anchor bolt at nominal 600mm centres.
9. Concrete wall or floor slab.

Note: The above partition specification is approved for heights up to 3m using framing members as detailed. Alternative specifications are available for heights up to 10m. Contact Promat Technical Services Department for further details or refer to Certifire Certificate of Approval No. CF 420A.

For Defection Head details please refer to pages 151-152.

Fig 5.20.5

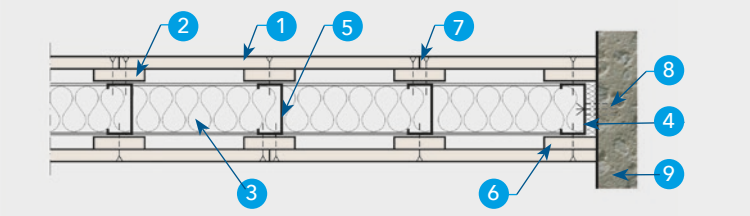

Horizontal section B - B

INTERNAL PARTITIONS - STEEL STUDS

TECHNICAL DATA

90 minutes fire rating, integrity and insulation in accordance with the criteria of BS 476: Part 22: 1987.

Nominal thickness of partition: **90mm**

Estimated sound insulation: **Rw 45dB**

1. Promat SUPALUX® boards, each side 12mm thick. Boards are either butt jointed or flush jointed.
2. Promat SUPALUX® fillet/coverstrip, 75mm wide, each side 9mm thick over studs and at horizontal board joints. Coverstrip at horizontal board joints fastened using M4 x 25mm long self-tapping screws at 300mm centres on both sides of the joint.
3. Rock wool, minimum 2 x 30mm thick x 60kg/m. All joints staggered by minimum 150mm between layers.
4. Rock wool seal or PROMASEAL® Sealant.
5. Steel stud, 48mm x 32/34mm x 0.5mm, at maximum 610mm centres.
6. Ceiling and floor steel channel, 50mm x 25mm x 0.5mm.
7. M4 x 32mm self-tapping screws at nominal 300mm centres.
8. M6 steel anchor bolt at nominal 600mm centres.
9. Concrete wall or floor slab.

Note: The above partition specification is approved for heights up to 3m using framing members as detailed. Alternative specifications are available for heights up to 10m. Contact Promat Technical Services Department for further details or refer to Certifire Certificate of Approval No. CF 420A.

For Defection Head details please refer to pages 151-152.

Certifire Approval No CF 420A

Fig 5.20.6

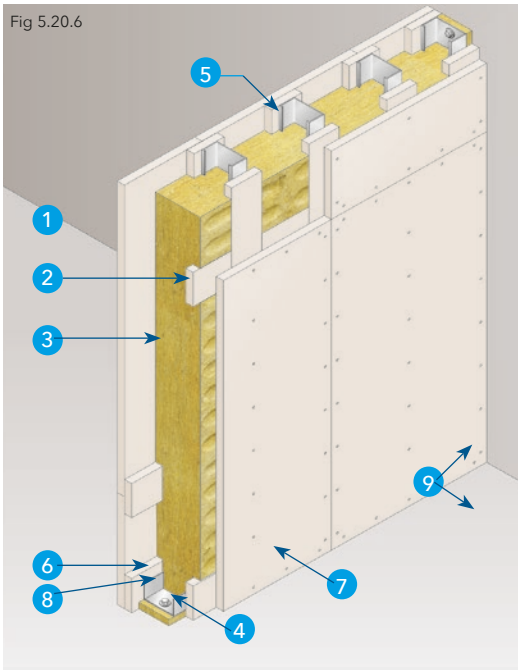

Certifire Approval No CF 420A

Fig 5.20.7

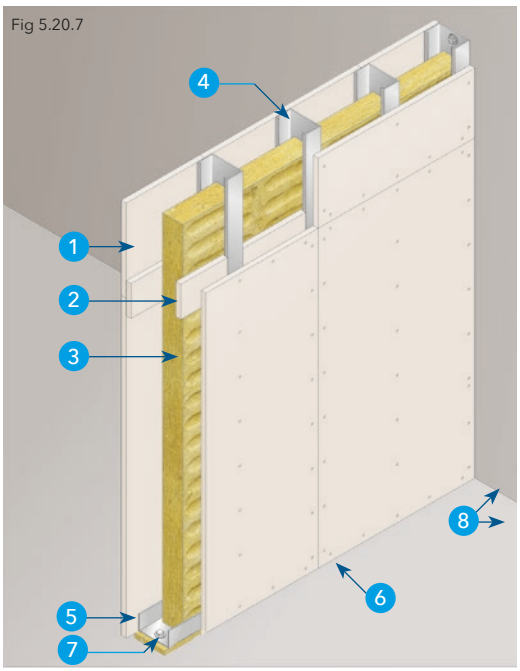

INTERNAL PARTITIONS - STEEL STUDS

TECHNICAL DATA

120 minutes fire rating, integrity and insulation in accordance with the criteria of BS 476: Part 22: 1987.

Nominal thickness of partition: **104mm**

Estimated sound insulation: **Rw 48dB**

1. Promat SUPALUX® boards, each side 15mm thick. Boards can be either butt jointed or flush jointed. No fillets required on vertical studs, coverstrips required behind horizontal board joints.
2. Promat SUPALUX® coverstrips, 100mm wide, each side 9mm thick. Fixed using M4 x 25mm self-tapping screws at 300mm centres on both sides of joint.
3. Rock wool, minimum 70mm thick x 128kg/m³ applied in 2 layers with all joints staggered between layers by minimum 150mm.
4. Steel stud, 73.8mm x 47/49mm x 0.6mm, at maximum 610mm centres.
5. Ceiling and floor steel channel, 75mm x 40mm x 0.6mm.
6. M4 x 32mm self-tapping screws at nominal 300mm centres.
7. M6 steel anchor bolt at nominal 600mm centres.
8. Concrete wall or floor slab.

Note: The above partition specification is approved for heights up to 3m using framing members as detailed. Alternative specifications are available for heights up to 10m. Contact Promat Technical Services Department for further details or refer to Certifire Certificate of Approval No. CF 420A.

For Defection Head details please refer to pages 151-152.

Fig 5.20.8

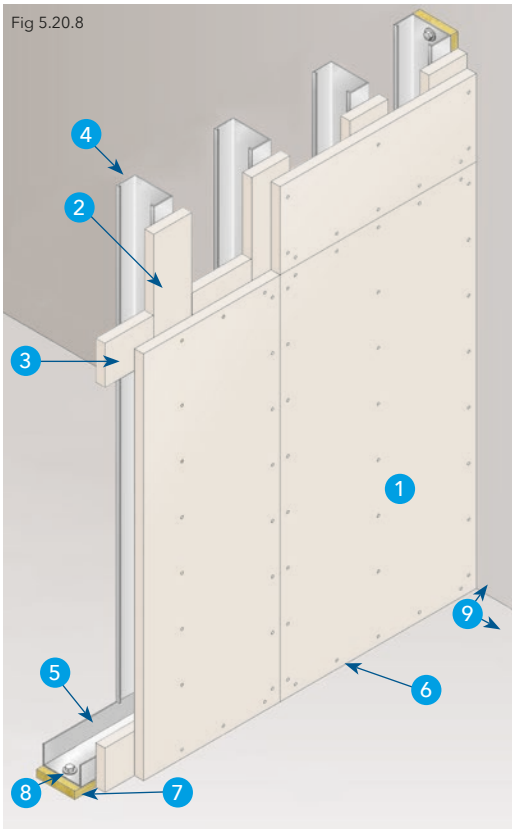

TECHNICAL DATA

120 minutes rating for integrity only in accordance with the relevant criteria of BS 476: Part 22: 1987.

Nominal thickness of partition: **66mm**

Estimated sound insulation: **Rw 29dB**

1. Promat SUPALUX® boards, 9mm thick, to fire risk side.
2. Promat SUPALUX® fillets, 75mm wide x 9mm thick. Fastened to steel framework with M4 x 25mm self-tapping screws at convenient centres.
3. Horizontal board joints backed with Promat SUPALUX® coverstrip 75mm wide x 9mm thick. Fastened using M4 x 25mm long self-tapping screws at nominal 300mm centres.
4. Steel stud, 48mm x 32/34mm x 0.5mm, at maximum 610mm centres.
5. Ceiling and floor steel channel, minimum 50mm x 25mm x 0.5mm.
6. M4 x 25mm self-tapping screws at nominal 300mm centres.
7. Rock wool seal or PROMASEAL® Sealant.
8. M6 steel anchor bolt at nominal 600mm centres.
9. Concrete wall or floor slab.

Note: The above partition specification is approved for heights up to 3m using framing members as detailed. Alternative specifications are available for heights up to 10m. Contact Promat Technical Services Department for further details or refer to Certifire Certificate of Approval No. CF 420A.

For Defection Head details please refer to pages 151-152.

Certifire Approval No CF 420A

INTERNAL PARTITIONS - STEEL STUDS

TECHNICAL DATA

180 minutes fire rating, integrity and insulation in accordance with the criteria of BS 476: Part 22: 1987.

Nominal thickness of partition: **134mm**

Estimated sound insulation: **Rw 46dB**

1. 1a Promat SUPALUX® boards, each side 2 x 9mm thick, no fillets required. Vertical and horizontal board joints are staggered between layers by minimum 600mm. Outer layer board joints, fastened to inner layer using M4 x 25mm long self tapping screws at nominal 300mm centres both sides of joint. Outer layer boards can be jointed or flush jointed.
2. Rock wool seal or PROMASEAL® Sealant.
3. Steel stud, 92mm x 47/49mm x 0.6mm, at maximum 610mm centres.
4. Steel floor perimeter steel channel, 100mm x 40mm x 0.6mm.
5. M4 x 32mm self tapping screws at nominal 300mm centres.
6. M6 steel expansion bolt at nominal 600mm centres.
7. Concrete wall or floor slab.
8. Rock wool, minimum 2 x 50mm x 140kg/m³ with all joints staggered between layers by minimum 150mm.

Note: The above partition specification is approved for heights up to 3m using framing members as detailed. Alternative specifications are available for heights up to 10m. Contact Promat Technical Services Department for further details or refer to Certifire Certificate of Approval No. CF 420A.

For Defection Head details please refer to pages 151-152.

Fig 5.20.9

Vertical section

Fig 5.20.10

Fig 5.20.11

Horizontal section

System no longer available
Consult Promat Technical for alternatives
System no longer available
Consult Promat Technical for alternatives

Certifire Approval No CF 420A

Fig 5.20.12

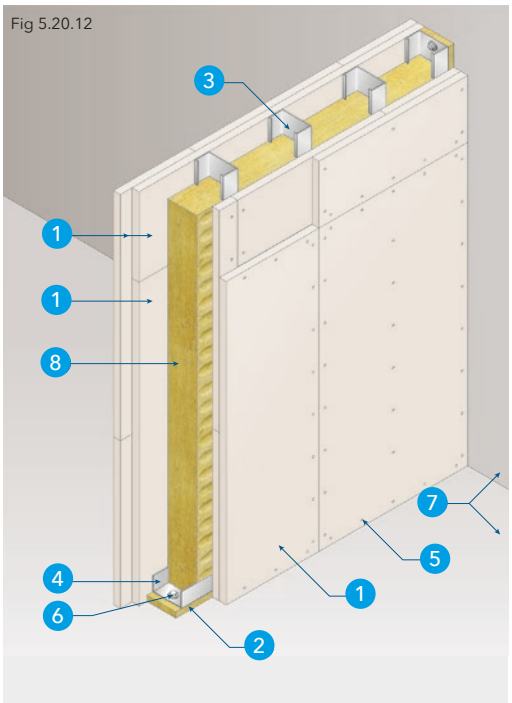

Fig 5.20.13

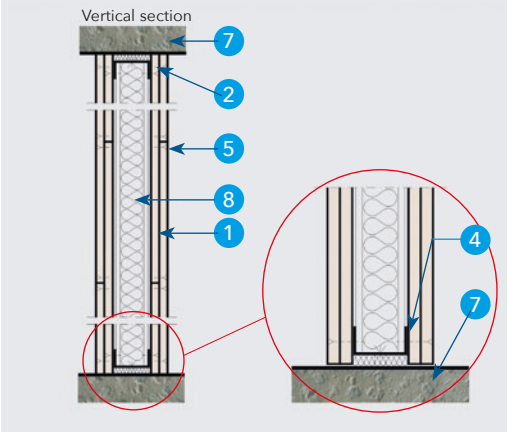

INTERNAL PARTITIONS - STEEL STUDS

TECHNICAL DATA

240 minutes fire rating, integrity and insulation in accordance with the criteria of BS 476: Part 22: 1987.

Nominal thickness of partition: 145mm

Estimated sound insulation: Rw 48dB

1. Promat SUPALUX® boards, each side 2 layers x 12mm thick the horizontal and vertical joints between boards staggered by a minimum of 600mm. Outer layer board joints fastened to inner layer using M4 x 25mm self-tapping screws at nominal 300mm centres on both sides of the joint.
2. Rock wool seal or PROMASEAL® Sealant.
3. Steel stud, 97mm x 49/52mm x 1.5mm, at maximum 610mm centres.
4. Ceiling and floor perimeter steel channel, 100mm x 40mm x 1.5mm.
5. M4 x 38mm self-tapping screws at nominal 300mm centres.
6. M6 steel anchor bolt at nominal 600mm centres.
7. Concrete floor slab or wall.
8. Rock wool, minimum 100mm thick x 128 kg/m³ applied in 2 layers of 50mm thickness with all joints staggered between layers by minimum 150mm.

NOTE: The above partition specification is approved for heights up to 3m using framing members as detailed. Alternative specifications are available for heights up to 10m. Contact Promat Technical Services Department for further details or refer to Certifire Certificate of Approval No. CF 420A.

For Defection Head details please refer to pages 151-152.

Fig 5.20.14

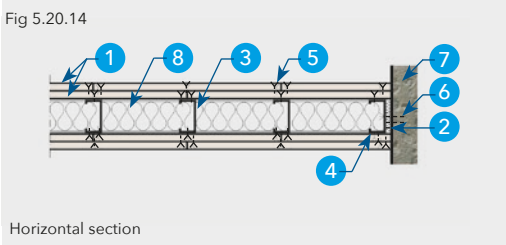

INTERNAL PARTITIONS - DEFLECTION HEADS

TECHNICAL DATA

Certification for Promat's partition systems Certifire Approval No CF 420A states a minimum requirement for deflection head movements in metal frame partition systems, depending on the maximum height of the partition. For partition specifications covered in this literature (maximum partition height 3m), a minimum expansion allowance of 15mm is required.

In addition to this, the 2007 edition of Approved Document B states that the deflection of a floor, in the event of a fire, should be accommodated in the design of compartment walls.

Accompanying specification details show recommended fixing methods for allowing up to 42mm movement at the head of the partition.

Specification details shown are suitable for use with metal frame partitions included in this chapter, up to maximum partition height of 3 metres. Alternative specifications, to allow detail's use for partitions up to 10m high, are also available. (Refer to Certifire Approval No 420A or contact Promat Technical Services Department for further details).

Certifire Approval No CF 420A

Approved Document B (2007 edition). B3 p75:

"Where compartment walls are located within the middle half of a floor, between vertical supports, the predicted deflection may be assumed to be 40mm, unless a smaller value can be justified by assessment. Outside this area the limit can be reduced linearly to zero at the supports".

Deflection Head Details

For all specifications the minimum size of the top channel should be as per specification details for the partition. The channels have at least the same thickness as the studs.

The allowance for expansion may be provided at stud joints and/or by the studs sliding up into the top channel. Any joint in the stud that incorporates an expansion allowance must not decrease the strength of the stud.

It must be ensured that any screw fixings for the boards do not restrict the expansion allowance.

The rock wool, if required, should extend to the top of the partition cavity.

When the web dimension of the studs is increased, thus increasing the depth of the cavity in the partition, then the thickness of rock wool should be increased to fill the cavity.

Deflection Head – Up to 15mm

The design of the deflection head detail allows the studs to slide into the top channel, with the space above the Promat SUPALUX® facing boards (10mm maximum for 30, 60 and 90 minute partitions, 15mm maximum for 120,180 and 240 minute partitions) filled either with PROMASEAL® Sealant, or the top channel mounted on minimum 2 x 9mm Promat SUPALUX® board.

1. Promat SUPALUX® facing boards, thickness as required to provide fire protection period.
2. Promat SUPALUX® strips (minimum 2 x 9mm SUPALUX) or PROMASEAL® Sealant.

Fig 5.30.1

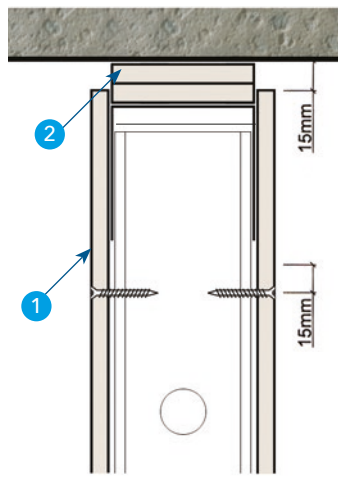

Detail 1: Deflection Head -15mm
(Rock wool not shown for clarity)

Certifire Approval No CF 420A

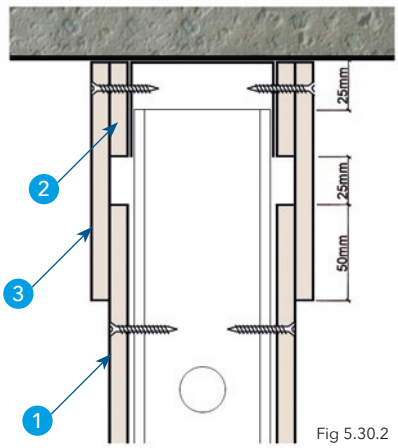

Fig 5.30.2

Detail 2: Deflection Head - 25mm
(Rock wool not shown for clarity)

INTERNAL PARTITIONS - DEFLECTION HEADS

Deflection Head – Up to 25mm

The Promat SUPALUX® facing boards are stopped short of the top channel and Promat SUPALUX® cover fillets and cover panels screwed to the top channel (as detailed below).

The cover panels overlap the facing boards by at least 50mm.

Table 5a

Fire Resistance (minutes)	1. Facing Board (mm)	2. Cover Fillet (mm)	3. Cover Panel (mm)
30	9	1 x 9	1 x 9
60	9 (with 6mm fillet)	1 x 6 + 1 x 9	1 x 9
90	12 (with 9mm fillet)	1 x 9 + 1 x 12	1 x 12
120	15	15	15
240	2 x 12	2 x 12	2 x 12

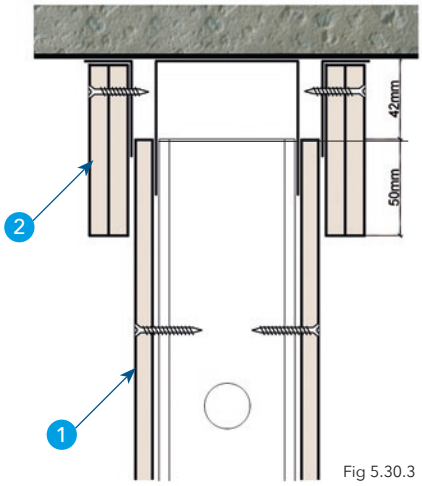

Fig 5.30.3

Detail 3: Deflection Head - 42mm
(Rock wool not shown for clarity)

Deflection Head – Up to 42mm

An additional steel channel or two steel angles are fastened to the concrete soffit. Promat SUPALUX® cover panels (as detailed below) are screwed to these additional steel sections so that they overlap the Promat SUPALUX® facing boards by at least 50mm.

Table 5b

Fire Resistance (minutes)	1. Facing Board (mm)	2. Cover Panel (mm)
30	1 x 9	1 x 9
60	9 (with 6mm fillet)	1 x 6 + 1 x 9
90	12 (with 9mm fillet)	1 x 9 + 1 x 12
120	15	15
240	2 x 12	2 x 12

Certifire Approval No CF 420A

INTERNAL PARTITIONS - SOLID PARTITIONS

TECHNICAL DATA

30 minutes fire rating, integrity and insulation in accordance with the criteria of BS 476: Part 22: 1987.

Nominal thickness of partition: **31mm**

Estimated sound insulation: **Rw 34dB**

1. Promat SUPALUX® boards, 15mm + 15mm. Stagger joints by at least 600mm. Layers either sandwich the perimeter angle or are fastened to one face.
2. Steel angle frame, minimum 30mm x 30mm x 0.6mm bedded on Promat PROMASEAL® Sealant.
3. M6 steel anchor bolt at nominal 500mm centres.
4. Self-tapping screws or similar. First layer 15mm, fixed to perimeter angle using M4 screws, at 300mm centres. Second layer 15mm, fixed to first layer using M4 x 30mm screws at 300mm centres around the perimeter and on both sides of each joint. Take care not to over tighten screws.
5. Concrete wall or floor slab.

Note: Maximum height of partition 5m.

Fig 5.40.1

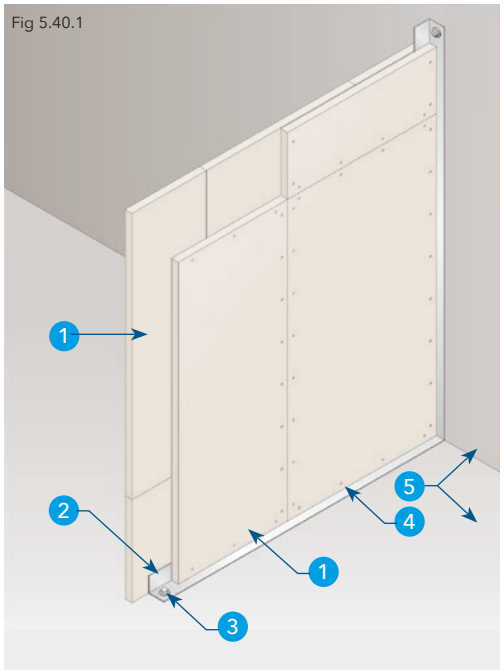

TECHNICAL DATA

60 minutes fire rating, integrity and insulation in accordance with the criteria of BS 476: Part 22: 1987.

Nominal thickness of partition: **36mm**

Estimated sound insulation: **Rw 36dB**

1. Promat SUPALUX® boards, 20mm + 15mm. Stagger joints by at least 600mm. Layers either sandwich the perimeter angle or are fastened to one face.
2. Steel angle frame, minimum 30mm x 30mm x 0.6mm bedded on PROMASEAL® Sealant.
3. M6 steel anchor bolt at nominal 500mm centres.
4. Self-tapping screws or similar. First layer 20mm, fixed to perimeter angle using M4 screws, at 300mm centres. Second layer 15mm, fixed to first layer using M4 x 30mm screws at 300mm centres around the perimeter and on both sides of each joint. Take care not to over tighten screws.
5. Concrete wall or floor slab.

Note: Maximum height of partition 5m.

Fig 5.40.2

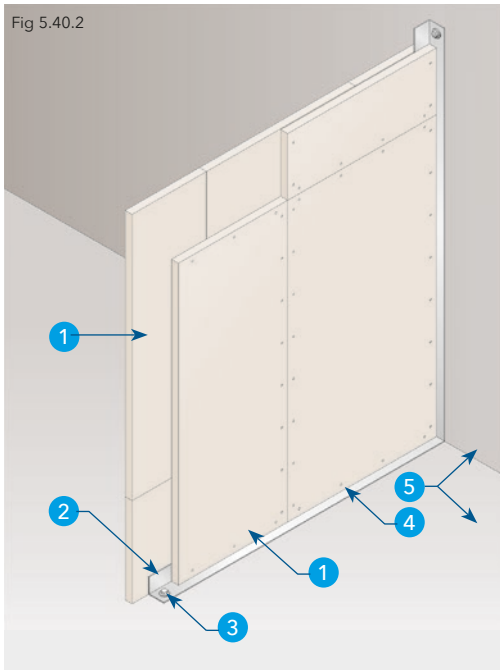

Certifire Approval No CF 420A

Fig 5.40.3

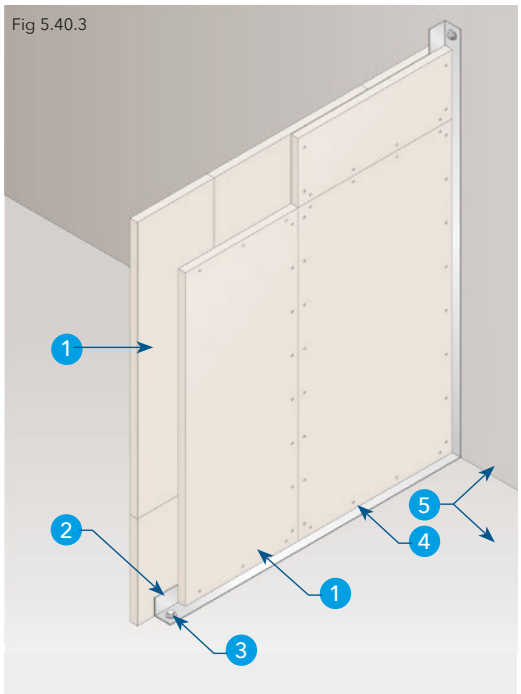

Fig 5.40.4

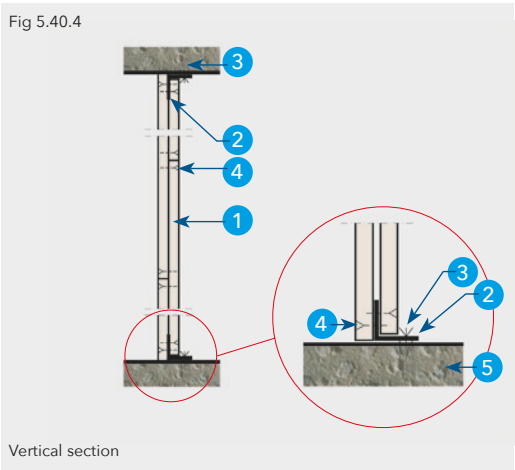

Vertical section

Fig 5.40.5

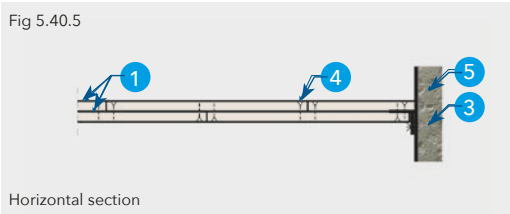

Horizontal section

INTERNAL PARTITIONS – SOLID PARTITIONS

TECHNICAL DATA

90 minutes fire rating, integrity and insulation in accordance with the criteria of BS 476: Part 22: 1987.

Nominal thickness of partition: **46mm**

Estimated sound insulation: **Rw 36dB**

1. Promat SUPALUX® boards, 25mm + 20mm. Stagger joints by at least 600mm. Layers either sandwich the perimeter angles or are fastened to one face.
2. Steel angle frame, minimum 30mm x 30mm x 0.8mm bedded on PROMASEAL® Sealant.
3. M6 steel anchor bolt at nominal 500mm centres.
4. Self-tapping screws or similar. First layer fixed to perimeter angle using M4 screws at 300mm centres. Second layer fixed to first layer using M4 x 35mm screws at 300mm centres around the perimeter and on both sides of each joint. Take care not to over tighten screws.
5. Concrete wall or floor slab.

Note: Maximum height of partition 5m.

INTERNAL PARTITIONS – SOLID PARTITIONS

TECHNICAL DATA

120 minutes fire rating, integrity and insulation in accordance with the criteria of BS 476: Part 22: 1987.

Nominal thickness of partition: **51mm**

Estimated sound insulation: **Rw 37dB**

1. Promat SUPALUX® boards, 2 x 25mm (Option A) or 20mm +15mm + 15mm (Option B) Stagger all joints by at least 600mm between layers. **Option A:** The layers either sandwich the perimeter angles or are fastened to one side. The two layers of Promat SUPALUX® are fixed to the perimeter angles using M4 screws at 300mm centres. Edges of Promat SUPALUX® board fastened to opposite layer using M4 x 45mm steel self-tapping screws at nominal 300mm centres on both sides of each joint.**Option B:** Perimeter angle sandwiched between 20mm layer and the first 15mm layer. First layer 20mm, fixed to perimeter angle using M4 screws at 300mm centres. Second layer 15mm, fixed to first layer using M4 x 30mm x screws at 300mm centres around the perimeter and on both sides of each joint. Third layer 15mm, fixed to first two layers using M4 x 45mm screws at 300mm centres around the perimeter and down the centre of each panel. Take care not to over tighten screws.
2. Steel angle frame, minimum 30mm x 30mm x 0.8mm bedded on PROMASEAL® Sealant.
3. M6 steel anchor bolt at nominal 500mm centres.
4. Steel self-tapping screws or similar.
5. Concrete wall or floor slab.

Note: Maximum height of partition 5m.

TECHNICAL DATA

240 minutes fire rating, integrity and insulation in accordance with the criteria of BS 476: Part 22: 1987.

Estimated sound insulation: Rw 42dB

Nominal thickness of partition: 101mm

1. First layer: Promat SUPALUX® board, 25mm thick.
2. Second layer: Promat SUPALUX® board, 25mm thick.
3. Third layer: Promat SUPALUX® board, 25mm thick.
4. Fourth layer: Promat SUPALUX® board, 25mm thick. Board layers either sandwich the perimeter angles or are fastened to one face. First two layers are independently fixed to perimeter angles with M4 steel self-tapping screws at 300mm nominal centres. Vertical and horizontal board joints staggered by minimum 600mm between layers. Edges of boards fastened to opposite layer with 13mm wide x 45mm long steel staples at nominal 150mm centres on both sides of each joint. Third and fourth layers are fastened to the adjacent layers around the perimeters and down the centre of each panel with 13mm wide x 45mm long steel staples at 150mm centres.
5. Galvanised steel angle, 50mm x 32mm x 1.2mm bedded on PROMASEAL® Sealant. Angle fixed to surrounding construction through the 32mm leg with M6 anchor bolts (or equivalent) at 400mm nominal centres.
6. 13mm x 45mm staples at 150mm centres.

Note: Maximum height of partition 5m.

Certifire Approval No CF 420A

Fig 5.40.6

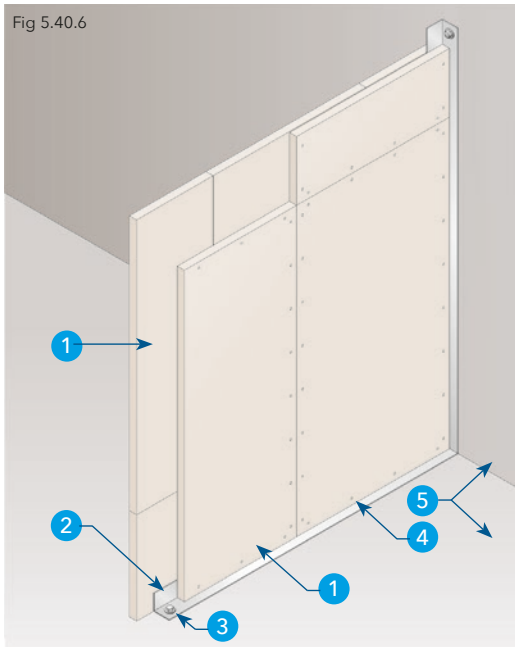

Fig 5.40.7

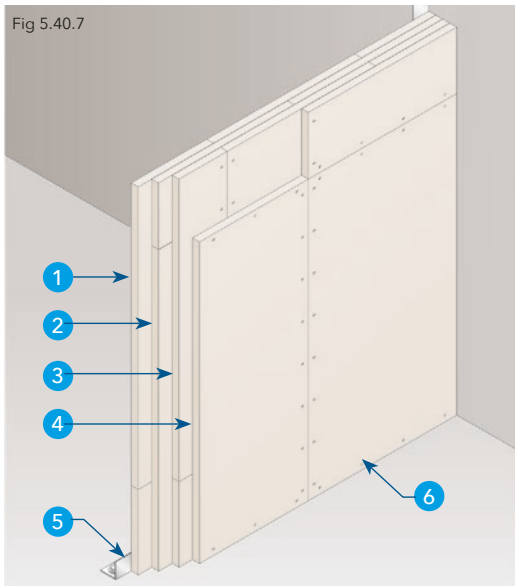

Fig 5.40.8

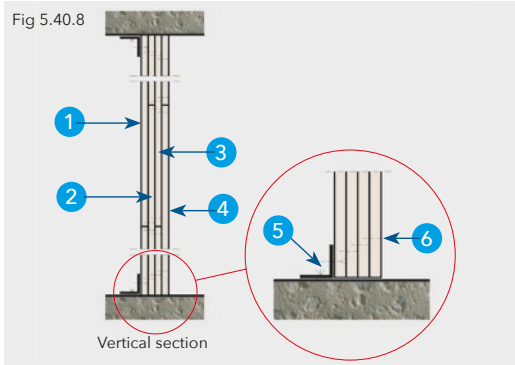

Certifire Approval No CF 420A

Fig 5.40.9

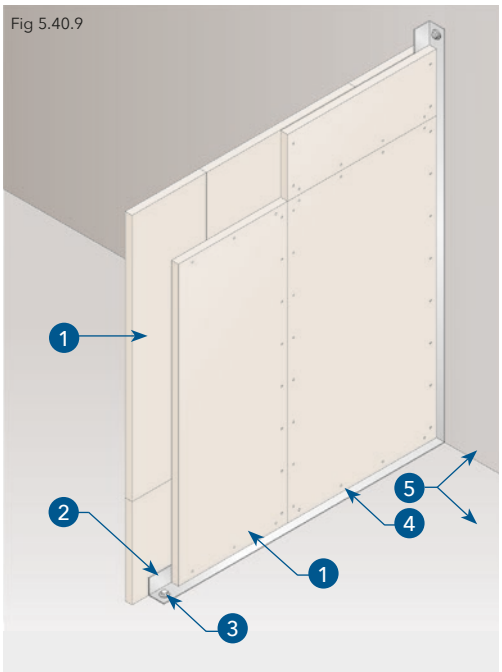

INTERNAL PARTITIONS – SOLID PARTITIONS

TECHNICAL DATA

240 minutes fire rating, integrity in accordance with the criteria of BS 476: Part 22: 1987, with insulation criteria of 90 and 120 minutes.

Nominal thickness of partition: **46mm** or **51mm**

1. **For 90 minutes insulation:** Promat SUPALUX® boards 20mm + 25mm, stagger all joints between layers by at least 600mm.

   For 120 minutes insulation: Promat SUPALUX® boards 25mm + 25mm, stagger all joints between layers by at least 600mm. Layers either sandwich perimeter angles or are fastened to one face.
2. Steel angle frame, minimum 50mm x 50mm x 1mm bedded on PROMASEAL® Sealant.
3. M6 steel anchor bolt at nominal 500mm centres.
4. Self-tapping screws or similar. First layer fixed to perimeter angle using M4 screws at 300mm centres. Second layer fixed to first layer using M4 x 35mm screws (90 minutes) or M4 x 45mm screws (120 minutes) at 300mm centres around the perimeter and on both sides of each joint. Take care not to over tighten screws.
5. Concrete wall or floor slab.

Note: Maximum height of partition 5m.

Fig 5.40.10

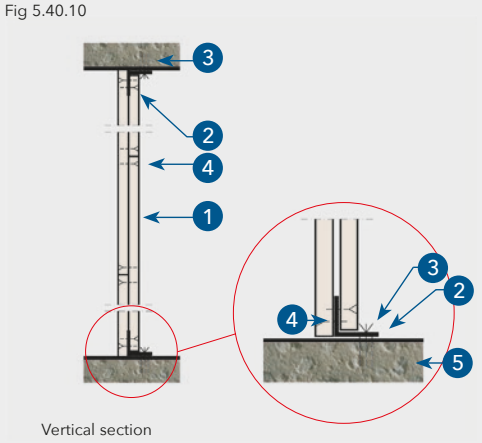

Fig 5.40.11

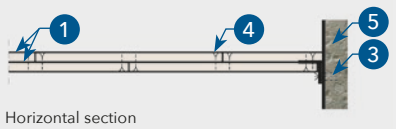

INTERNAL PARTITIONS – SHAFTWALL SYSTEM

This system is applicable for use in those areas requiring integrity and insulation performance, but where access for construction is possible from one side only. e.g. lift shafts.

The system is designed for wall heights up to 7m (60 minutes) / 6.4m (120 minutes).

TECHNICAL DATA

60 minute and 120 minute fire rating in accordance with the criteria of BS 476: Part 22: 1987.
60 minute system - EI60 (shaft to corridor) and EI60 (corridor to shaft)
120 minute system - EI120 (shaft to corridor) and E120, EI90 (corridor to shaft)*

1. Promat SUPALUX® boards, 9mm thick. Boards tightly fitted between studs and held in place with steel securing channels. Horizontal board joints backed by Promat SUPALUX® cover strip.
2. Steel channels, 85mm x 40mm x 1.2mm fixed back to back at maximum 300mm centres with M5 self-tapping screws to form "I" section and located at maximum 610mm centres.
3. Steel channels, 85mm x 40mm x 1.2mm fixed at edge of shaft wall partition at maximum 600mm centres with M6 steel anchor belt.
4. Steel channels, 88mm x 40mm x 1.2mm bottom track fixed at maximum 600mm centres with M6 steel anchor bolt. All perimeter channels to be bedded with PROMASEAL® Sealant or bedded on rock wool.
5. Steel channels, 88mm x 70mm x 1.2mm head track fixed at maximum 600mm centres with M6 steel anchor bolt. All perimeter channels to be bedded with PROMASEAL® Sealant or bedded on rock wool (omitted from drawing).
6. Securing channel to be continuous steel channel 72mm x 25mm x 0.7mm fixed to steel web with M5 steel self-tapping screws at 300mm centres.
7. Promat SUPALUX® cover strip, 9mm thick x 100mm wide at all horizontal board joints, fastenened using M4 x 16mm self-tapping screws at nominal 200mm centres on both sides of joint.
8. **60 minute fire rating:** Rock wool, minimum 75mm thick x 45kg/m³

   120 minute fire rating: Rock wool, minimum 75mm thick x 100kg/m³
9. **60 minute fire rating:** Promat SUPALUX® fillet, 20mm thick x 100mm wide fixed to steel channels with self-tapping or self drilling screws. 9mm Promat SUPALUX® board fixed to stud and perimeter channels through the fillets using M4 x 38mm self-tapping screws at 200mm nominal centres.

   120 minute fire rating: Promat SUPALUX® fillet, 25mm thick x 100mm wide fixed to steel channels with self-tapping or self-drilling screws. 9mm Promat SUPALUX® board fixed to stud and perimeter channels through the fillets using M4 x 38mm self-tapping screws at 200mm nominal centres.

**Relaxation should be sought from the approval authority on the basis that no combustible materials are likely to be stored adjacent to the structure. Alternatively, for full fire insulation (EI120 corridor to shaft) a Promat SUPALUX® fillet 15mm thick x 100mm wide should be fixed to exposed metal on the shaft side of the construction. Cover strip fixed with M3.5 steel self drilling and tapping screws at nominal 200mm centres.*

Certifire Approval No CF 420A

Fig 5.50.1

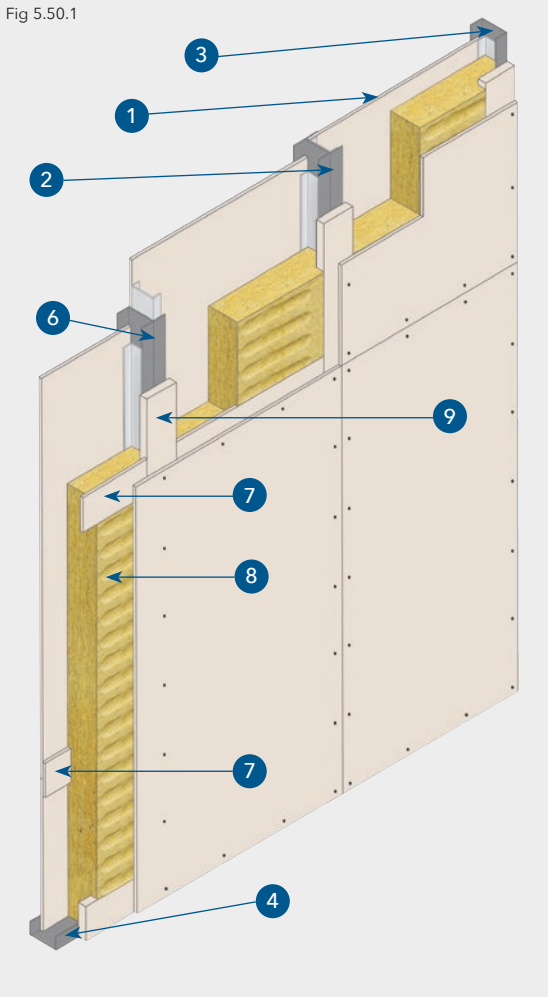

The construction is designed to fulfil the criteria of the relevant standards relating to the compartmentation of lift shafts and to provide resistance to positive and negative pressures resulting from the operation of lifts.

Estimated sound insulation:
43-44dB (60 minute system)
44-45dB (120 minute system)

Note: Where Promat SUPALUX® is to be exposed to direct weathering during the building phase, impregnated Promat SUPALUX® is available.

Chapter 5: Partitions and External Walls

DURASTEEL® Partitions and Barriers

Certifire Approval No CF 429

Fig 5.60.1

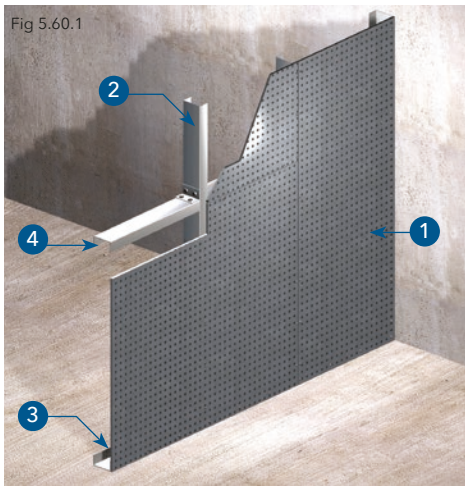

Integrity only

Fig 5.60.2

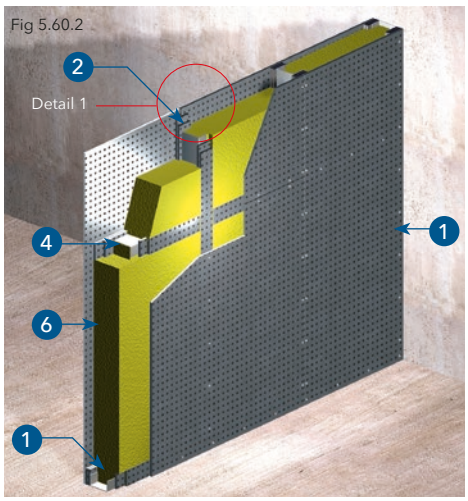

Integrity and insulation

C-CHANNEL STUDS

Promat DURASTEEL® partitions provide vertical fire barriers to meet the requirements of BS 476: Part 22: 1987.

Promat DURASTEEL® partition and barrier systems combine superior levels of fire resistance and high surface impact resistance. They will withstand the wear and tear of industrial and commercial environments and resist the forces of high pressure hose streams encountered during fire-fighting. These outstanding characteristics provide a durable and fire safe method for the construction of vertical barrier systems to maintain compartmentation in industrial environments. When designing the Promat DURASTEEL® framing system, consideration must be made for expansion, deflection, windloading and loadbearing requirements. Please consult Promat Technical Services Department for further details.

The constructions have been tested to both fire and impact resistance in accordance with BS 476: Part 22: 1987 and similar international standards with the construction subjected to impact of 3000Nm both prior and after the fire test.

TECHNICAL DATA

1. Promat DURASTEEL®, 9.5mm.
2. Steel sections forming framework, usually comprising 80mm x 60mm x 3mm thick channels (for partition heights up to 6m) located at 1200mm centres or at every board vertical edge. These framing centres may vary depending on the size and performance requirements of the system.
3. Steel sections forming top and bottom tracks of framework, usually comprising 80mm x 60mm x 3mm channels (for partition heights up to 6m), fixed to substrate using steel expansion bolts at nominal 500mm centres.
4. Horizontal framing members comprising steel channels, 80mm x 60mm x 3mm, at 2500mm centres or at every board horizontal edge.
5. Promat DURASTEEL® fillets, thickness and number required depend on the fire resistance of the system.
6. Rock wool, thickness and density in accordance with the required fire resistance performance.
7. Steel angle cleats. Alternatively, joints between framing members can be welded.
8. Welded joint.

Fig 5.60.3

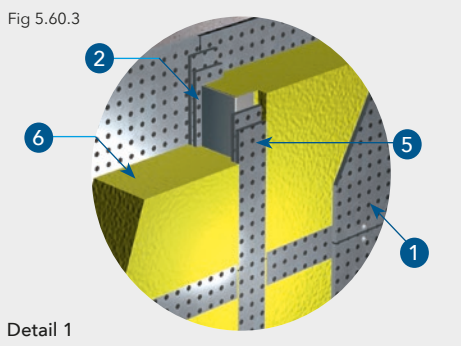

Detail 1

Fig 5.60.4

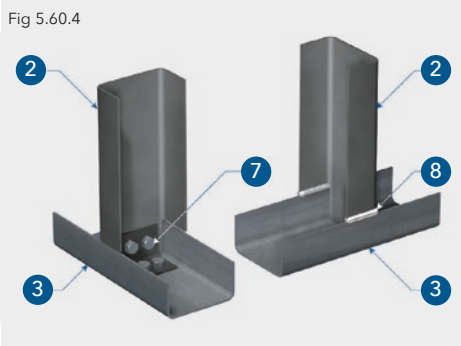

Internal Partitions

CONVERSION OF EXTERNAL WALL TO INTERNAL WALL - CONCEALED GRID SYSTEM

TECHNICAL DATA

30 minutes fire rating, integrity and insulation in accordance with the criteria of BS 476: Part 22: 1987.

Estimated sound insulation:
Rw 35-40dB based on **200mm** deep sheeting rail

1. Horizontal sheeting rail at maximum 2.2m centres.
2. Promat SUPALUX® board, 9mm thick.
3. Promat SUPALUX® fillet, 9mm thick x depth of sheeting rail, fixed to both faces of sheeting rails with M4 steel self-tapping screws at nominal 300mm centres.
4. Galvanised steel top hat sections, approximately 26mm deep x 50mm wide x 15mm lips x 0.6mm at 600mm centres. Width of face that panels are screwed to should be 50mm minimum. Secure top hats to every rail using two M4 steel fixings per rail fixed through lips of section at each junction.
5. Perimeter galvanised angle, 25mm x 25mm x 0.6mm secured to wall or floor using steel screws or bolts, and plugs at nominal 500mm centres.
6. M4 x 19mm self-tapping screws at nominal 300mm centres. Screw boards to every top hat section.
7. Promat SUPALUX® cover strips, 100mm wide at horizontal joints. Fixed using M4 self-tapping screws at nominal 300mm centres on both sides of joints.

Note 1: The specifications may vary slightly depending on the sheeting rail size. Any structural steel protruding from the Promat SUPALUX® lining should also be fire protected. For further details please contact Promat Technical Services Department.

Note 2: Rock wool not required for 30 minutes fire resistance, but may be required to allow thermal or acoustic performance to be achieved.

Certifire Approval No CF 420A

Fig 5.80.1

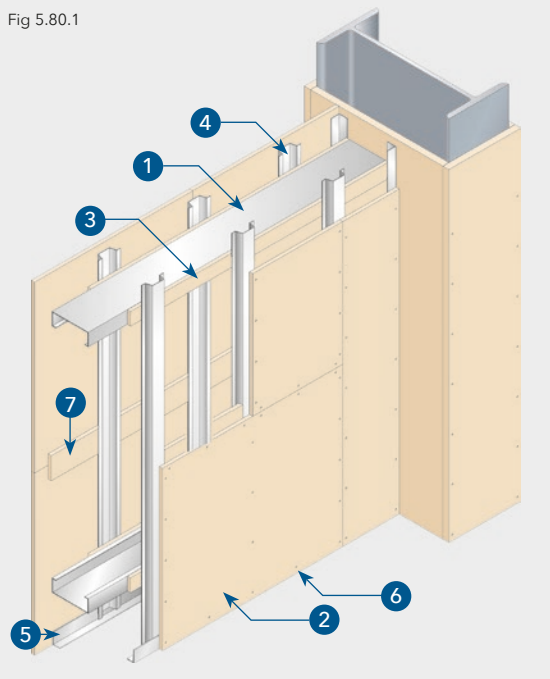

Certifire Approval No CF 420A

Fig 5.80.2

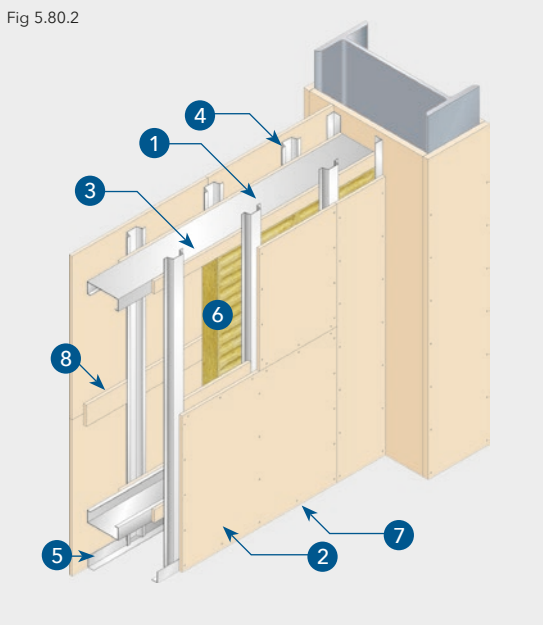

CONVERSION OF EXTERNAL WALL TO INTERNAL WALL - CONCEALED GRID SYSTEM

TECHNICAL DATA

60 minutes fire rating, integrity and insulation in accordance with the criteria of BS 476: Part 22: 1987.

Estimated sound insulation:
Rw 45-50dB based on **200mm** deep sheeting rail

1. Horizontal sheeting rail at maximum 2.2m centres.
2. Promat SUPALUX® board, 9mm thick.
3. Promat SUPALUX® fillet, 9mm thick x depth of sheeting rail fixed to both faces of sheeting rails with M4 steel self-tapping screws at nominal 300mm centres.
4. Galvanised steel top hat sections, approximately 26mm deep x 50mm wide x 15mm lips x 0.6mm, at 600mm centres. Width of face that panels are screwed to should be 50mm minimum. Secure top hats to every rail using two M4 steel fixings per rail fixed through lips of section at each junction.
5. Perimeter galvanised angle, 25mm x 25mm x 0.6mm secured to wall or floor using steel screws or bolts, and plugs at nominal 500mm centres.
6. Rock wool quilt, minimum 100mm x 23 kg/m³ or 80mm x 30kg/m³ must be suspended between the sheeting rails. The rock wool can be secured to the underside of each rail using galvanised angle 50mm x 25mm x 0.5mm or similar, fastened with M4 self-tapping screws at maximum 300mm centres.
7. M4 x 19mm self-tapping screws, at nominal 300mm centres. Screw boards to every top hat section.
8. Promat SUPALUX® cover strips, 100mm wide at horizontal joints fixed using M4 self-tapping screws at nominal 300mm centres on both sides of joints.

Note: The specifications may vary slightly depending on the sheeting rail size. Any structural steel protruding from the Promat SUPALUX® lining should also be fire protected. For further details please contact Promat Technical Services Department.

CONVERSION OF EXTERNAL WALL TO INTERNAL WALL - CONCEALED GRID SYSTEM

TECHNICAL DATA

120 minutes fire rating, integrity and insulation in accordance with the criteria of BS 476: Part 22: 1987.

Estimated sound insulation:
Rw 45-50dB based on **200mm** deep sheeting rail

1. Horizontal sheeting rail at maximum 2.2m centres.
2. Promat SUPALUX® board, 9mm thick.
3. Promat SUPALUX® fillet, 9mm thick x depth of sheeting rail, fixed to both faces of sheeting rails, with M4 steel self-tapping screws at nominal 300mm centres.
4. Galvanised steel top hat sections, approximately 26mm deep x 50mm wide x 15mm lips x 0.6mm, at 600mm centres. Width of face that panels are screwed to should be 50mm minimum. Secure top hats to every rail using two M4 steel fixings per rail fixed through lips of section at each junction.
5. Perimeter galvanised angle, 25mm x 25mm x 0.6mm secured to wall or floor using steel screws or bolts, and plugs at nominal 500mm centres.
6. Rock wool quilt should be wired mineral wool, minimum 80mm x 100 kg/m³ must be suspended between the sheeting rails. The rock wool can be secured to the underside of each rail using galvanised angle 50mm x 25mm x 0.5 similar, fixed through the angle and rock wool to the rail with M4 self-tapping screws at maximum 300mm centres.
7. M4 x 19mm self-tapping screws, at nominal 300mm centres. Screw boards to every top hat section.
8. Promat SUPALUX® cover strips, 100mm wide at horizontal joints. Fixed using M4 self-tapping screws at nominal 300mm centres on both sides of joints.

Note: The specifications may vary slightly depending on the sheeting rail size. Any structural steel protruding from the Promat SUPALUX® lining should also be fire protected. For further details please contact Promat Technical Services Department.

Certifire Approval No CF 420A

Fig 5.80.3

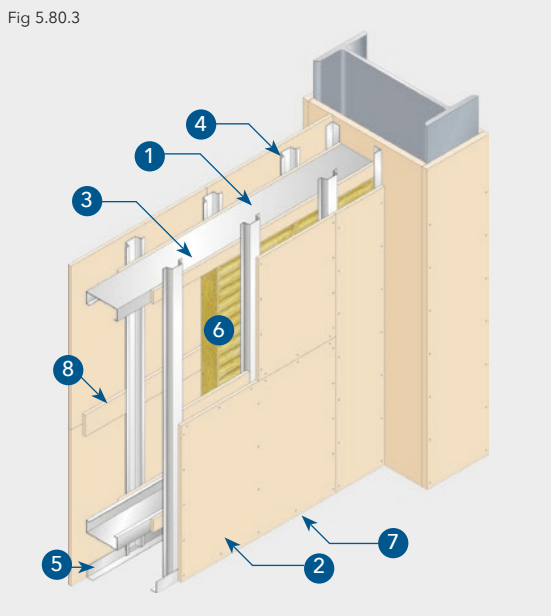

Chapter 5: Partitions and External Walls

External Walls

EXTERNAL WALLS

Fire Testing Methods

Non-loadbearing external walls should normally be tested or assessed in accordance with BS 476: Part 22: 1987 and are required to satisfy the failure criteria of integrity and insulation when exposed to fire from either side. In some instances there will be additional criteria concerning the heat radiation from the unexposed face of the walls. For additional advice, please consult Promat Technical Services Department.

Design Considerations

In the case of external walls, the proximity of a building to the relevant (facing) boundary determines the probability of it being a danger to other buildings on adjoining sites or of it being at risk from a neighbouring building on fire. Building Regulations specify different fire resistance periods for external walls depending upon their distance from the relevant boundary. Where the walls are required to provide fire resistance only from the inside, loadbearing capacity and integrity are required to be satisfied for the full period; whereas insulation is required for only 15 minutes (Scottish Building Regulations may require different periods of fire insulation). This means that satisfactory constructions will be very different from those required to maintain insulation for the full period and where fire resistance is required from either side.

The following points should be considered when determining the correct specification to ensure an external wall will provide the required fire performance. Further advice can be obtained from Promat Technical Services Department.

1. Distance from the Relevant Boundary
   Building Regulations sometimes relax the requirements for external walls which are one metre or more from the relevant property boundary. In most cases the wall only needs to be tested or assessed for its performance when exposed to fire from within the building.
   In addition, the maximum insulation period required is only 15 minutes. (Note: Different periods of fire insulation may be required by the Scottish Building Regulations).
2. External Cladding
   The external cladding can significantly affect the overall fire performance of an external wall. For example, some composite external cladding panels with expanded plastic cores may perform much worse than a single skin steel sheet due to the low melting point of the core.
3. Structural Steel
   All structural steel within a fire protected external wall should also be protected. This includes walls which may only require to be partially protected. If the steel frame of a single storey building has not been designed in accordance with the document, 'Fire and steel construction: The behaviour of steel portal frames in boundary conditions,1990' (2nd Edition) published by the Steel Construction Institute, the rafters of the roof may also need protection as their collapse could lead to the collapse of the external wall. Generally, any steelwork located on the non-fire side of a Promat SUPALUX® wall lining will be adequately fire protected.
4. Single Storey Buildings
   The external walls of single storey buildings which may otherwise not require to be fire protected, may still require to be protected if they are too close to the relevant boundary.
5. Cavity Barriers
   Building Regulations specify where cavity barriers are required.
6. Thermal Insulation
   U-values will depend upon the complete wall design. These U-values can be improved by the addition of more rock wool. For additional information, please consult Promat Technical Services Department.
7. Impact Resistance
   Promat SUPALUX® is robust and reasonably impact resistant. Where there is risk of heavy impact however, and in most cases below a height of 2m above floor level, it is advisable to introduce additional framing members as stiffening. Protection barriers or masonry walls up to 2m in height are often advisable.
8. Wind Loading
   The Promat systems offer good resistance to wind induced internal pressures. If there are predominant openings in the external envelope of the building however, the advice of Promat Technical Services Department should be sought.

EXTERNAL WALLS – FURTHER THAN 1M FROM THE RELEVANT BOUNDARY, CONCEALED GRID SYSTEM

TECHNICAL DATA

120 minutes fire rating, integrity and 15 minutes insulation in accordance with the criteria of BS 476: Part 22: 1987 internal fire only.

Estimated sound insulation:
Rw 43-50dB based on **200mm** deep sheeting rail

1. Horizontal sheeting rail at maximum 2.2m centres.
2. External cladding, either single skin steel or fibre cement sheet (minimum Class 0 rating). Fixed to sheeting rails with steel fixings.
3. Promat SUPALUX® board, 6mm thick, screw fixed to all top hat sections.
4. Galvanised perimeter angle, 25mm x 25mm x 0.6mm.
5. Galvanised steel top hat sections, approximately 26mm deep x 50mm wide x 15mm lips x 0.6mm at 600mm centres. Width of face that panels are screwed to should be 50mm minimum. Secure top hats to every rail using M4 steel self-tapping screws through lips of section at each junction.
6. M4 steel self-tapping screws at nominal 300mm centres. Screw boards to every top hat section.
7. Promat SUPALUX® cover strips 6mm thick x 100mm wide at horizontal joints fastened with M4 steel self-tapping screws at nominal 300mm centres on both sides of the joint.
8. Rock wool, minimum 60mm x 23kg/m³, suspended in cavity. Secure to underside of sheeting rails using galvanised angle, 50mm x 25mm x 0.5mm, or similar, fixed through the angle and mineral wool to the rail using M4 self-tapping screws at maximum 300mm centres.

Note 1: This specification does not cover the use of composite cladding systems with combustible cores.

Note 2: Rock wool (8) can be omitted if exterior profile sheet is a fibre cement product.

Certifire Approval No CF 420A

Fig 5.110.1

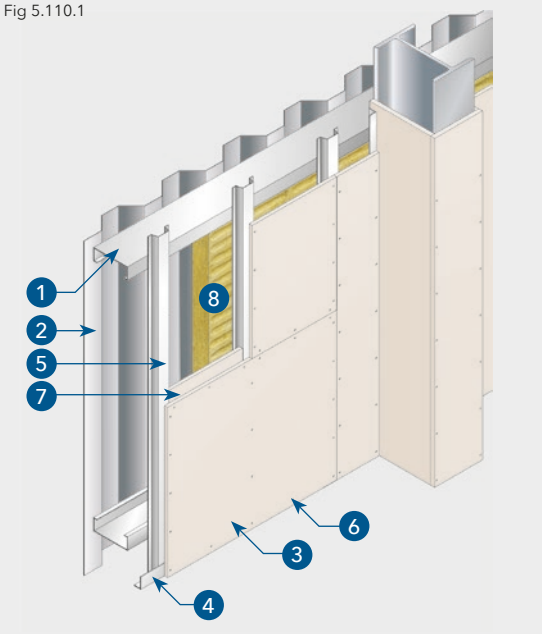

Concealed grid

Certifire Approval No CF 420A

Fig 5.110.2

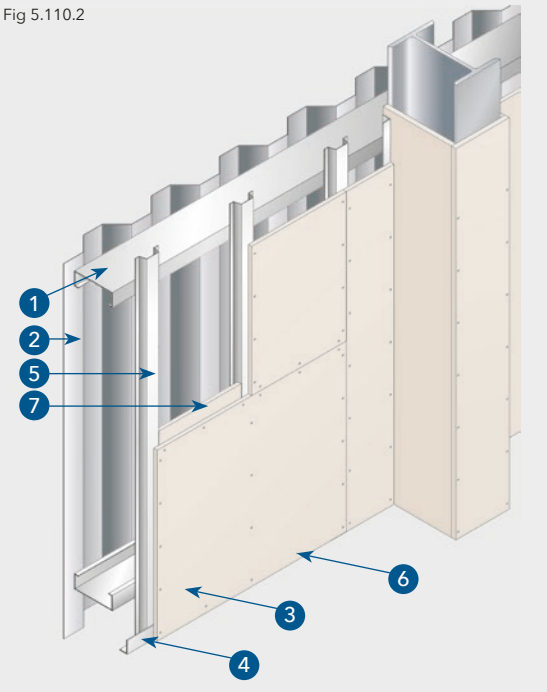

Concealed grid

NOTE: If the requirement is for the full period of fire integrity with 30 minutes fire insulation, then 9mm Promat SUPALUX® should be used as the internal lining board. Rock wool (minimum 60mm x 23 kg/m³) will be required in the cavity. Rock wool should be fixed to sheeting rails using galvanised steel angle (minimum 50 x 25 x 0.5mm thick) fastened with M4 steel self-tapping screws at maximum 300mm centres. Rock wool is not required if the external cladding sheet is a minimum 6mm thick fibre cement product.

EXTERNAL WALLS – FURTHER THAN 1M FROM THE RELEVANT BOUNDARY, CONCEALED GRID SYSTEM

TECHNICAL DATA

240 minutes fire rating, integrity and 15 minutes insulation in accordance with the criteria of BS 476: Part 22: 1987 internal fire only.

Estimated sound insulation: Rw 33-40dB based on 200mm deep sheeting rail

1. Horizontal sheeting rail at maximum 2.2m centres.
2. External cladding, either single skin steel or fibre cement sheet (minimum Class 0 rating). Fixed to sheeting rails with steel fixings.
3. SUPALUX® board, 9mm thick, screw fixed to all top hat sections.
4. Galvanised perimeter angle, 25mm x 25mm x 0.6mm.
5. Galvanised steel top hat sections, approximately 26mm deep x 50mm wide x 15mm lips x 0.6mm at 600mm centres. Width of face that panels are screwed to should be 50mm minimum. Secure top hats to every rail using M4 steel self-tapping screws through lips of section at each junction.
6. M4 steel self-tapping screws at nominal 300mm centres. Screw boards to every top hat section.
7. Promat SUPALUX® cover strips 9mm thick x 100mm wide at horizontal joints, fastened with M4 steel self-tapping screws at nominal 300mm centres on both sides of the joint.

Note 1: This specification does not cover the use of composite cladding systems with combustible cores.

Note 2: Rock wool is not required for fire resistance in this specification but may be required for thermal or acoustic performance.

Notes

GB ORDERLINE

For placing orders, delivery enquiries
and local stockists etc.
T: 0800 373 636
F: 01275 379 037
E: orderline@etexbp.co.uk

TECHNICAL SERVICES

For technical support and advice.
T: 0800 145 6033
E: technical.promat@etexbp.co.uk

RESOLUTIONS

For any problems with invoices or deliveries.
T: 01275 379 031 or 0800 373 636
E: customer.support@etexbp.co.uk

Etex Building Performance Limited
Marsh Lane, Easton-in-Gordano,
Bristol, BS20 0NE
T: 0800 373 636 F: 01275 379 037

promat.com

© 2022 Etex Building Performance Limited

V4 14/06/2022