Promat

The Passive Fire Protection Handbook

The UK's comprehensive guide to passive fire protection

Chapter 7
Penetration Seals

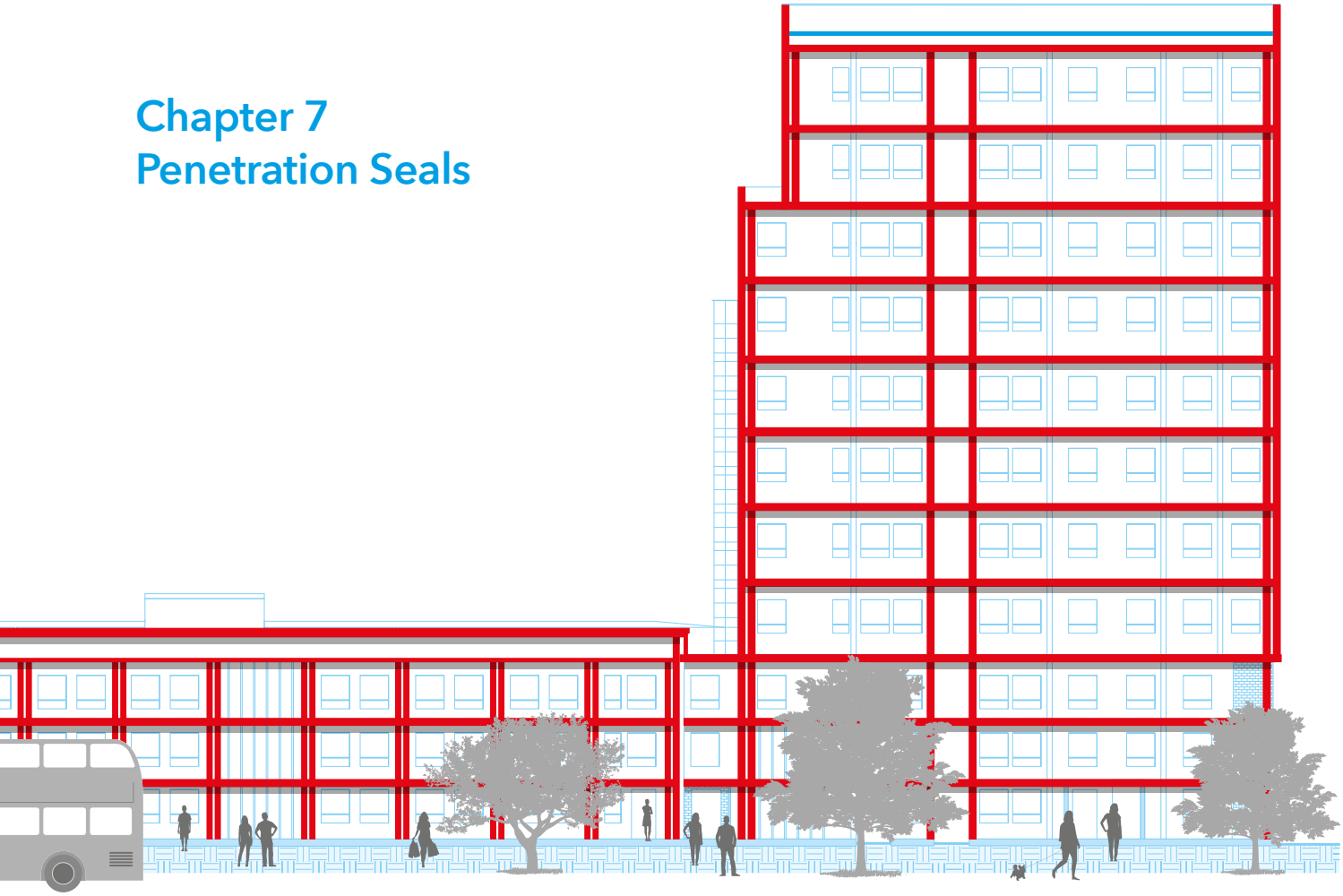

JUNE 2022

Please check that this is the current version by visiting the Promat website.
For archived versions please contact technical services.

etex inspiring ways of living

The Passive Fire Protection Handbook

Contents

Chapter 7: Penetration Seals.....191
Introduction.....192
Fire Collars.....194
Promat PROMASEAL® Intumescent Acrylic Sealant.....195
Promat PROMASEAL® Silicone Sealant.....197
Promat PROMASEAL® Sealants.....199
Promat PROMASEAL® Fire Compound.....201
Promat PROMASEAL® Fire Compound Extra Strength.....204
Promat PROMASEAL® Fire Barrier.....206
Promat PROMASEAL® Fire Pillow.....212
Promat PROMASEAL® Pipewrap.....214
Promat PROMASEAL® Expansion Joint Strip.....216
Promat PROMASEAL® UniCollar®.....218

Penetration Seals

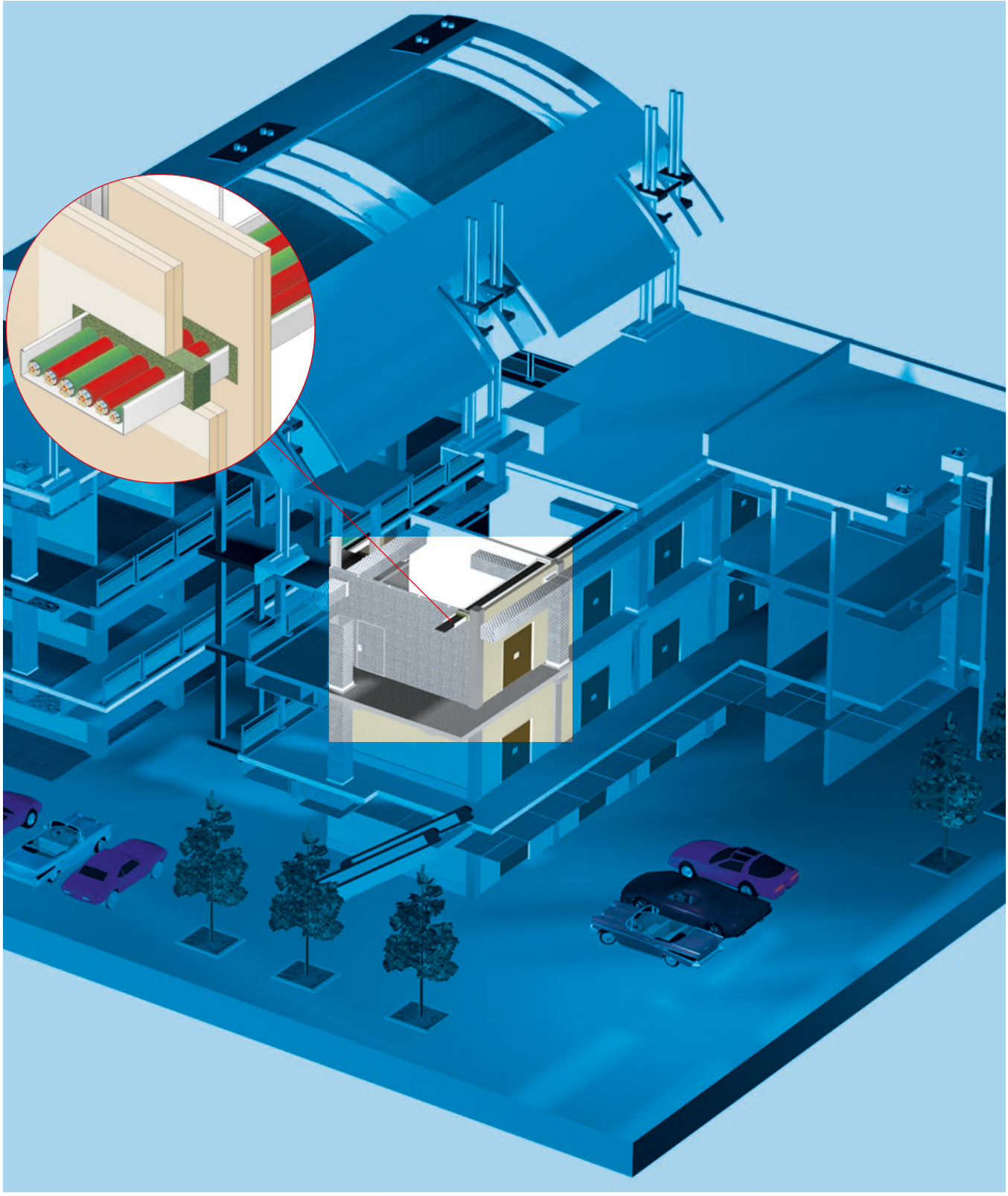

Chapter 7: Penetration Seals

Introduction

FLOORS, SLABS OR WALLS

In every application discussed in this handbook, irrespective of whether it is using a Promat product or system, the importance of sealing any gaps in fire resisting constructions is vital to ensure the system works to its maximum ability to save life and property. Such gaps are typically at service penetrations through walls and floors, but would also include gaps left for structural movement and gaps due to poor workmanship.

Recognising this, the development of effective solutions to seal gaps at service penetrations has increased over recent years and Promat has become the world leader in supplying such solutions.

Every service passing through fire resistant building elements reacts in a different way in the event of fire, so there is no single solution or product that will protect all services.

Services must be tested in accordance with the test methods set out in appropriate standards. Tests are carried out in accordance with the general principles of BS 476: Part 20: 1987 or BS EN 1366-3: 2004 and BS EN 1366-4: 2006

It is of particular importance to note that for plastic pipe penetrations care must be taken before accepting test reports or assessments. Research has clearly shown that the different types of plastics behave in different ways under fire conditions.

Test data should reflect the following:

1. The Type of Plastic
   Plastics soften, melt or burn at different temperatures. Fire collars have to be shown to cope with all of their variables.
2. The Diameter of Pipe
   The bigger the pipe the more difficult it is to seal.
3. The Orientation of Pipe (wall or floor)
   Pipes tested in a floor will not necessarily behave in the same manner when tested in a wall and the reverse equally applies.
4. The Wall Thickness of Pipe
   Thin wall pipes collapse quickly and fire collars have to react fast to close the opening. Thick walled pipes collapse slowly and fire collars have to retain enough expanded intumescent product to seal openings over a longer period of time.
5. The End Conditions During The Test
   Pipes that have been fire tested with both the end inside and the end outside of the test furnace capped (sealed) must only be protected with these fire collars when the end conditions on site are similar.

It is generally accepted that if a pipe is tested with the end inside the furnace capped, and the end outside the furnace uncapped, then this test will cover storm waste, sewage and water supply. If pipes are tested with both ends capped, this would represent a less onerous position e.g. pipes that have taps, valves or water traps in line.

FAILURE CRITERIA

Failure is measured in terms of integrity and insulation. Stability (or structural adequacy) is not recorded for service penetrations.

Integrity failure occurs when cracks, holes or openings occur through which flames or hot gases can pass. This is measured in different ways, depending upon the standard used.

f) Using a cotton pad, held against any gap, to see if the cotton pad ignites within 10 seconds;
   or

g) If the gap is equal to or greater than 150mm x 6mm; or

h) If a 25mm diameter probe can pass through a gap.

Insulation failure occurs when the temperature rise on the unexposed surface of the service, on the unexposed face of the building element, 25mm from the penetration or on the seal itself, exceeds 180°C. Insulation failure is inevitable on many metal service penetrations and is often waived as a failure criterion. Under such circumstances it is essential that combustibles be kept at least 100mm clear of these services at the point of penetration.

The PROMASEAL® range of products were introduced to complement Promat's wide range of fire protection boards.

Additional information and advice on the current range of Promat PROMASEAL® products can be obtained from the relevant data sheets available from Promat. Alternatively, please contact the Promat Technical Services Department.

IMPORTANT NOTE:
Because of the diversity of applications and the on-going test programmes, the following notes on this section are of a general nature only and it is essential to confirm that the system specified or being installed is approved for use. Please contact the Promat Technical Services Department to confirm correct specification.

Introduction

Fig 7.10.1

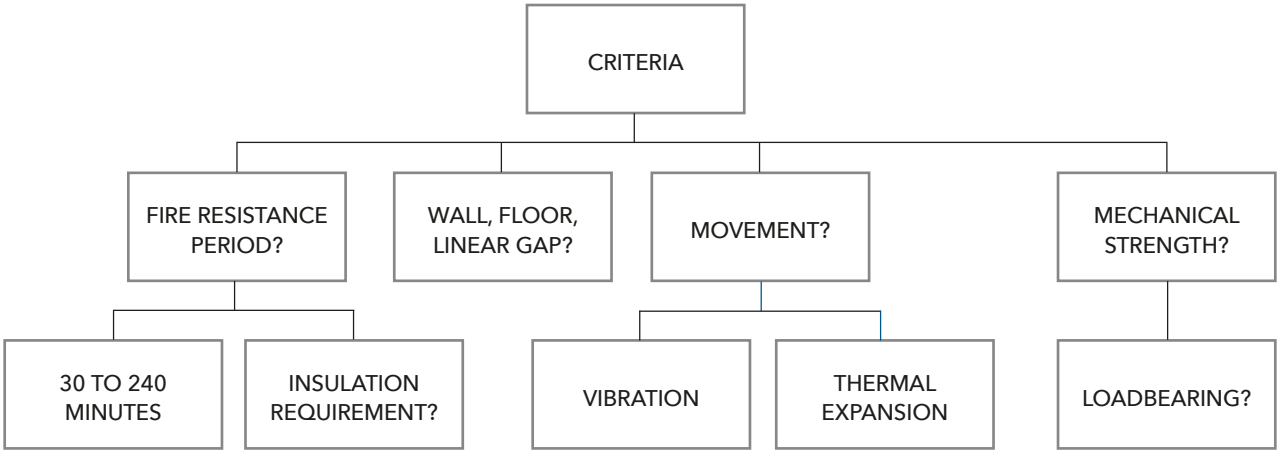

- Size of opening
- Penetration services
- Flexibility of seal(s)
- Smoke or gas tightness
- Ambient conditions
- Design life
- Frequency of change to services
- Parent construction

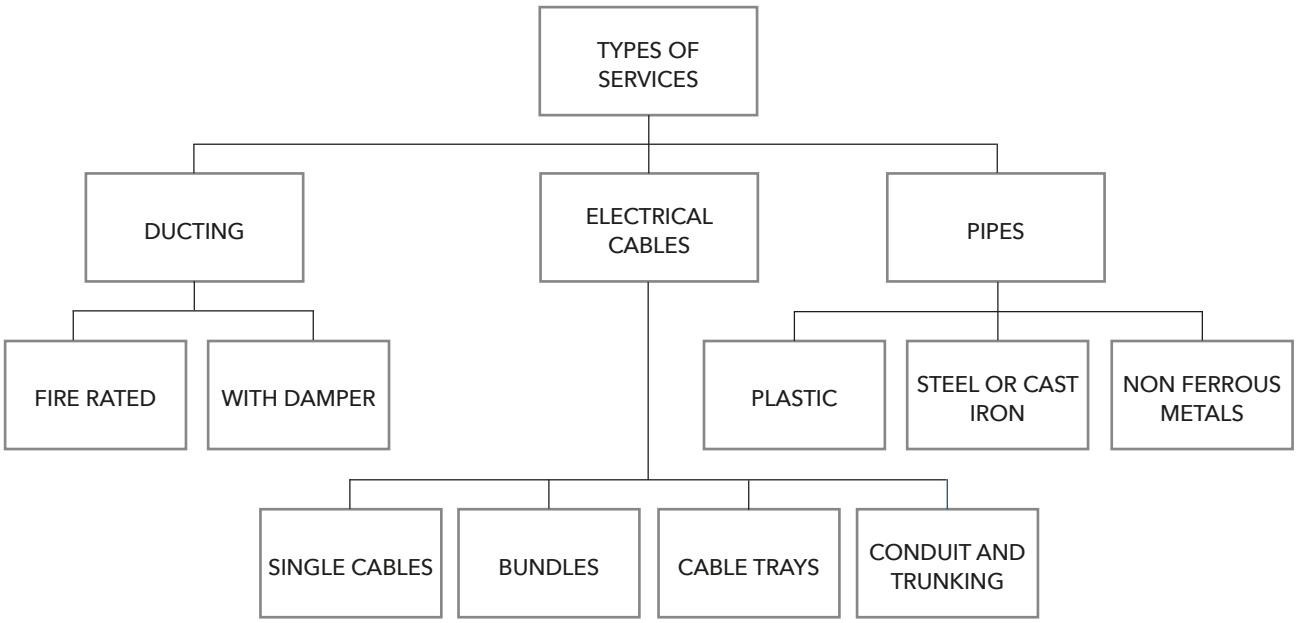

- Intumescent systems in lightweight constructions
- Rigid seals in 'dynamic' barriers
- Large spans and thermal expansion
- Smoke or toxicity in populated zones
- Dusty or friable materials in clean-room applications

Chapter 7: Penetration Seals

Fire Collars

IMPORTANT NOTE:
Because of the diversity of applications and the on-going test programme, the following notes in this section are of a general nature only and it is essential to confirm that the fire collar specified or being installed is approved for use on the size and type of plastic pipe, the orientation and type of service. Always contact the Promat Technical Services Department to confirm the specification is correct.

FIRE COLLARS FOR PLASTIC PIPE PENETRATION

It has been shown that plastic pipes penetrating compartment walls or floors or other fire barriers present the potential for fire to pass from one compartment to another when the plastic melts and burns away. All Building Regulations specify that the fire rating of the separating building element between compartments must not be impaired by services that pass through them.

The acceptable methods of maintaining this fire rating will vary, however by far the most acceptable is to install fire collars on the plastic pipes.

It is essential that the correct fire collars are specified and that they are installed in accordance with the manufacturers instructions. The most common type of pipe collar is surface mounted.

Surface mounted collars (also known as retrofit collars) are fixed around the plastic pipe, onto the surface of the building element. For floor slabs this is on the underside of the slab. For walls, they are generally placed on both sides to protect against fire exposure from either direction.

If it can be shown that the fire can only come from the one side, then the fire collar may be placed on the fire attack side of the wall provided that test data is available to prove the application achieves the required fire rating. Promat PROMASEAL® UniCollar® can be used as a retrofit collar.

Promat PROMASEAL® Intumescent Acrylic Sealant

Promat PROMASEAL® Intumescent Acrylic Sealant is supplied in a 310ml cartridge and has excellent adhesion to most types of surfaces. The sealant cures in air to form a non-hardening, tack-free seal, preventing the passage of smoke, toxic gases and fire.

APPLICATIONS

Promat PROMASEAL® Intumescent Acrylic Sealant is suitable for sealing small gaps and holes in applications requiring up to 240 minutes fire resistance. Promat PROMASEAL® Intumescent Acrylic Sealant is suitable for most applications but Promat PROMASEAL® Silicone Sealant would be required for surface temperatures over 70°C or where increased joint movement capability is needed. Acoustic data is available on this product, please contact the Technical Services Department.

FIRE PERFORMANCE

The fire performance of Promat PROMASEAL® Sealants will vary according to the particular application, the surrounding substrates, the depth of sealant applied and the amount of sealant exposed to heat. Promat PROMASEAL® Sealants have been tested to the procedures adopting the criteria of BS 476: Part 20: 1987. Please note that if the fire risk is from both sides of the gap, then the systems described should be installed on both sides.

ADVANTAGES (PROMAT PROMASEAL® INTUMESCENT ACRYLIC SEALANT)

- Good movement capability
- Suitable for joints up to 50mm wide
- Tack-free
- Flexible
- Fire tested up to 240 minutes (integrity)
- Good adhesion to most building products
- Will not slump
- Can be overpainted (Intumescent Acrylic Sealant only)
- Halogen free
- Suitable for internal and semi-exposed applications

PAINTING

Promat PROMASEAL® Intumescent Acrylic Sealant can be overpainted after approximately 48 hours (dependent on ambient conditions). Consideration should be given to the flexibility of the finished painted coat when movement is expected. PROMASEAL® Silicone Sealant cannot be overpainted.

INSTALLATION

Promat PROMASEAL® Sealants will adhere to most construction materials. If in doubt, the sealant should be applied to a small length of joint and examined, or the Promat Technical Services Department should be contacted. All surfaces should be clean, dry, oil and grease-free, although very porous surfaces may need to be wetted with clean water to prevent too rapid drying of the sealant before proper cure. Surfaces should also be free of dust and friable particles. It is advisable to tool the sealant firmly against the joint faces and the sealant can be dressed off with a wetted trowel.

QUANTITY REQUIRED

Promat PROMASEAL® Sealants are packaged in 310ml cartridges. To calculate the approximate number of cartridges required, use the following formula:

$$\text{No. of cartridges required} = \frac{\text{Joint length (m) x joint width (mm) x sealant depth (mm)}}{310}$$

This does not allow for wastage. Please note that joint length is in metres (m) but joint width and sealant depth are in millimetres (mm).

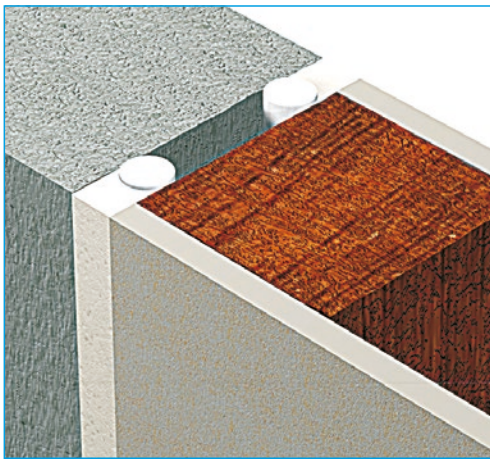

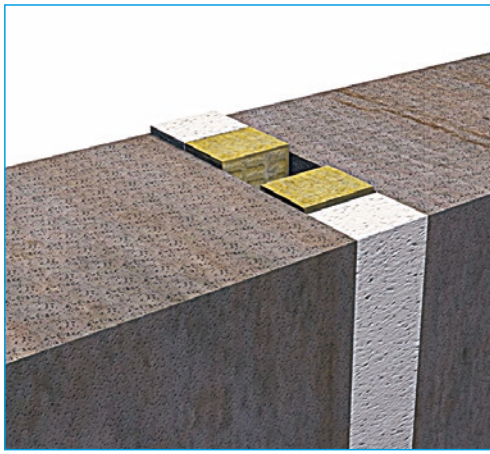

Note: If the fire risk is from both sides of the gap, then the sealant should be installed on both sides.

Property	PROMASEAL® Intumescent Acrylic
Sealant base	Water-based acrylic sealant
Cure system	Water loss
Speed of Cure (23°C, 50% RH)	-
Skin over time (23°C, 50%RH)	Minimum 15 minutes
Overpaint times	48 hours
Application temperature range	+5 to +30°C
Service temperature range	-20 to +70°C
Joint movement capability	± 12.5%
Slump	Nil at joints up to 28mm
Elongation at break	N/A
Expansion in fire conditions	300%
Shelf life when stored between 5°C to 30°C	18 months

Chapter 7: Penetration Seals

Promat PROMASEAL® Intumescent Acrylic Sealant

Certifire Approval No CF 431

Table 7a Promat PROMASEAL® Intumescent Acrylic Sealant - Approval Matrix						
Wall and Floor Installations						
Product Name		Promat PROMASEAL® Intumescent Acrylic Sealant				
Configuration		Max. Joint Width (mm)	Minimum Seal Depth (mm)	Backing Material	Integrity (mins)	Insulation (mins)
Wall Constructions	Aerated blockwork/ aerated blockwork	50	25	Ethafoam 50mm diameter	240	60
	Hardwood/ aerated blockwork	50	25	Ethafoam 50mm diameter	60	60
	Softwood/ aerated blockwork	25	12	Ethafoam 30mm diameter	30	30
	Steel/ aerated blockwork	30	15	Polyethylene 40mm diameter	240	90
	Steel/ aerated blockwork	50	25	Ethafoam 50mm diameter	60	30
	Brick/autoclaved aerated concrete	25	10	Polyethylene 30mm diameter	240	30
	Autoclaved aerated concrete/autoclave aerated concrete	30	15	Polyethylene 30mm diameter	240	180
	Autoclaved aerated concrete/autoclave aerated concrete	20	10	Polyethylene 20mm diameter	240	240
	Autoclaved aerated concrete/autoclave aerated concrete	40	20	Polyethylene 50mm diameter	240	180
	Autoclaved aerated concrete/autoclave aerated concrete	50	25	Polyethylene 60mm diameter	240	180
Floor Constructions	Autoclaved aerated concrete brick	15	10	Polyethylene 20mm diameter	240	0
	Aerated concrete/ aerated concrete	20	10	Polyethylene 30mm diameter	240	120
	Aerated concrete/ aerated concrete	30	15	Polyethylene 40mm diameter	240	60
	Aerated concrete/ aerated concrete	40	20	Polyethylene 50mm diameter	240	60
	Aerated concrete/ aerated concrete	50	25	Polyethylene 60mm diameter	240	180
	Softwood/aerated concrete	25	12	Ethafoam 30mm diameter	30	30
	Hardwood/ aerated concrete	50	25	Ethafoam 50mm diameter	30	30
	Steel/ aerated concrete	50	25	Ethafoam 50mm diameter	60	60
Application Technique: For good adhesion the surfaces of the building element shall be free of any dust or grease and be suitably primed.						
Note: The concrete walls must be at least 150mm thick and the floors at least 230mm thick and have at least the same fire rating as that required for the penetration seal. Masonry and concrete gap faces will be within the density range of 450 to 2300kg/m³, and gap faces will be free from loose or flaking material.						

LIVE DOCUMENT - CONTACT PROMAT FOR LATEST DETAILS OR REFER TO CERTIFIRE WEBSITE

A safety data sheet is available from the Promat Technical Services Department and, as with any other materials, should be read before working with the product. The product is not classified as a dangerous substance and so no special provisions are required regarding the carriage and disposal of the product to landfill. This can be placed in an on-site skip with other general building waste which should be disposed of by a registered contractor.

Promat PROMASEAL® Silicone Sealant

Promat PROMASEAL® Silicone Sealant is a silicone-based fire protection sealant, supplied in 310ml cartridges. Adhesion is excellent to most types of surface. The sealants cure in air to form a non-hardening, tack-free seal, preventing the passage of smoke, toxic gases and fire.

APPLICATIONS

Promat PROMASEAL® Silicone Sealant is suitable for sealing small gaps and holes in applications requiring up to 240 minutes fire resistance.

Promat PROMASEAL® Silicone Sealant would be required for service temperatures over 70°C or where increased joint movement capability is needed.

Promat PROMASEAL® Silicone Sealant can be used in external applications.

FIRE PERFORMANCE

The fire performance of Promat PROMASEAL® Silicone Sealants will vary according to the particular application, the surrounding substrates, the depth of sealant applied and the amount of sealant exposed to heat.

Promat PROMASEAL® Sealants have been tested to the procedures and adopting the criteria of BS 476: Part 20: 1987. Please note that if the fire risk is from both sides of the gap, then the systems as described should be installed on both sides.

ADVANTAGES (PROMAT PROMASEAL® SILICONE SEALANT)

- Good movement capability
- Suitable for joints up to 30mm wide
- Tack-free
- Flexible
- Fire tested up to 240 minutes (integrity)
- Good adhesion to most building products
- Will not slump
- Halogen free
- Suitable for internal and semi-exposed applications

PAINTING

Promat PROMASEAL® Silicone Sealant should not be used for food-grade applications and should not be in contact with acids, oxidising agents or with materials that can exude certain components over a period of time. Promat PROMASEAL® Silicone Sealant cannot be overpainted.

INSTALLATION

Promat PROMASEAL® Sealants will adhere to most construction materials. If in doubt, the sealant should be applied to a small length of joint and examined, or the Promat Technical Services Department should be contacted. Promat PROMASEAL® Silicone Sealant cannot be overpainted.

All surfaces should be clean, dry, oil and grease-free, although very porous surfaces may need to be wetted with clean water to prevent too rapid drying of the sealant before proper cure.

Surfaces should also be free of dust and friable particles. Any loose paint should be removed from steel. It is advisable to tool the sealant firmly against the joint faces and the sealant can be dressed off with a wetted trowel.

QUANTITY REQUIRED

Promat PROMASEAL® Sealants are packaged in 310ml cartridges. To calculate the approximate number of cartridges required, use the following formula:

$$\text{No. of cartridges required} = \frac{\text{Joint length (m)} \times \text{joint width (mm)} \times \text{sealant depth (mm)}}{310}$$

This does not allow for wastage. Please note that joint length is in metres (m) but joint width and sealant depth are in millimetres (mm).

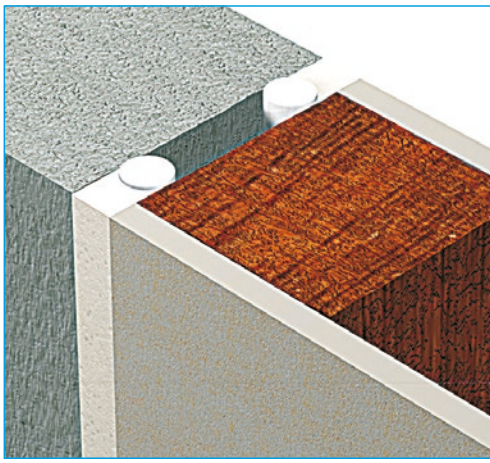

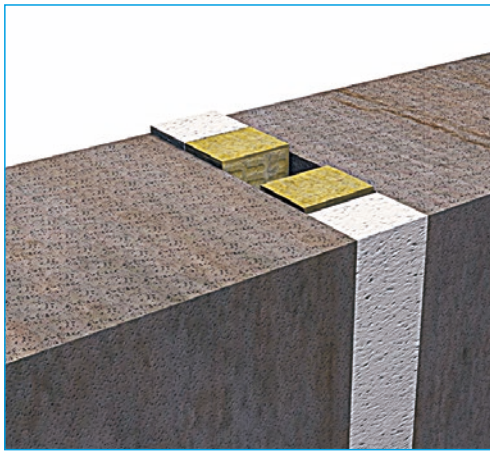

Note: If the fire risk is from both sides of the gap, then the sealant should be installed on both sides.

Property	PROMASEAL® Silicone
Sealant base	Silicone
Cure system	Oxime
Speed of Cure (23°C, 50% RH)	4mm/day approx. 10mm/6 days approx.
Skin over time (23°C, 50%RH)	Minimum 15 minutes
Overpaint times	N/A
Application temperature range	+5 to +30°C
Service temperature range	-30 to +150°C
Joint movement capability	± 25%
Slump	Nil at joints up to 28mm
Elongation at break	250%
Expansion in fire conditions	N/A
Shelf life when stored between 5°C to 30°C	18 months

Promat PROMASEAL® Silicone Sealant

Certifire Approval No CF 424

Table 7b Promat PROMASEAL® Silicone Sealant - Approval Matrix					
Wall and Floor Installations					
Product Name	Promat PROMASEAL® Silicone Sealant				
Configuration	Max. Joint Width (mm)	Minimum Seal Depth (mm)	Seal position	Integrity (mins)	Insulation (mins)
Concrete or masonry or steel to timber gap surfaces, 125mm thick	30	22	Single or double sided seal, exposed or unexposed face	30	30
		44		60	60
Concrete or masonry to steel gap surfaces	30	30	Double-sided seal (two 15mm deep beads)	240	240
Concrete or masonry gap surfaces, 125mm thick	10	5	Single sided seal on the exposed or unexposed face	240	0
	20	10		240	0
	30	15		240	0
Concrete or masonry gap surfaces at least 100mm thick	10	5	Exposed	30	30
		5	Unexposed	30	30
		5+7	Both	90	90
		7+7	Both	120	120
	20	10	Exposed	30	30
		10	Unexposed	30	30
		10+10	Both	90	90
		12+12	Both	120	120
	30	18	Exposed	30	30
		15	Unexposed	30	30
		15+15	Both	120	120
Concrete or masonry gap surfaces at least 125mm thick	10	5	Unexposed	120	120
		5+5	Both	180	180
	20	10	Unexposed	90	90
		10+10	Both	120	120
		12+12	Both	120	120
	30	15	Unexposed	30	30
		17	Unexposed	30	30
		15+15	Both	120	120
		18+18	Both	180	180
Concrete or masonry gap surfaces at least 215mm thick	10	5	Unexposed	240	240
		5+5	Both	240	240
	20	10	Unexposed	120	120
		10+10	Both	240	240
	30	15	Unexposed	120	120
		15+15	Both	240	240
Application Technique: For good adhesion the surfaces of the building element shall be free of any dust or grease and be suitably primed.					
Note: The concrete floors and/or masonry or concrete walls must be at least 100mm thick and have at least the same fire rating as that required for the penetration seal. Masonry and concrete gap faces must be within the density range of 450 to 2300kg/m3 and gap faces will be free from loose or flaking material. Steel gap faces will be in material at least 6mm thick and will be free from dirt, loose rust, grease and other coatings. The steel member will remain free from significant deflection or thermal movement that increases the original gap width by more than 10% when exposed to standardised fire test conditions.					

CONTACT PROMAT FOR LATEST DETAILS OR REFER TO CERTIFIRE WEBSITE
LIVE DOCUMENT -

A safety data sheet is available from the Promat Technical Services Department and, as with any other materials, should be read before working with the product. The product is not classified as a dangerous substance and so no special provisions are required regarding the carriage and disposal of the product to landfill. This can be placed in an on-site skip with other general building waste which should be disposed of by a registered contractor.

Promat PROMASEAL® Sealants

PENETRATION SEALS

Promat PROMASEAL® Intumescent Acrylic or Silicone Sealant are ideal for sealing small gaps with or without penetrating elements. Supplied in a 310ml cartridge. They are also ideal for sealing around metal pipes, cables, conduits, bus ways and ducts which penetrate walls or floors.

They bond to masonry, concrete, calcium silicate board, plasterboard, metal and cable coverings and remains flexible after curing to accommodate thermal movement. PROMASEAL® Silicone Sealant is suitable for thermal movement of metal pipes.

The fire rating achieved will be limited to the fire rating of the building element through which the service passes. The size of the gaps around services that can be protected with Promat PROMASEAL® sealants have limitations. For metal pipes passing through floors the gap between the pipe and floor should be no greater than 38mm and for walls no greater than 20mm. For bundles of cables passing through floors, the maximum opening should be no greater than 50mm diameter (approximately 2000mm²) and through walls, 38mm diameter (approximately 1100mm²).

For cables on cable trays passing through walls, the maximum opening size should not exceed 70mm high x 440mm wide. In some installations when gaps are at the upper end of the range, sealant may be inclined to slump.

TECHNICAL DATA

Up to 120 minutes fire rating in accordance with the criteria of BS 476: Part 20: 1987, depending on application.

1. Promat PROMASEAL® Intumescent Acrylic or Silicone Sealant.
2. Polyethylene backing rod.
3. Cables.
4. Cable tray.
5. Metal pipe.
6. Ventilation duct.
7. Concrete floor.
8. Masonry wall.
9. Lightweight partition.

Fig 7.20.1

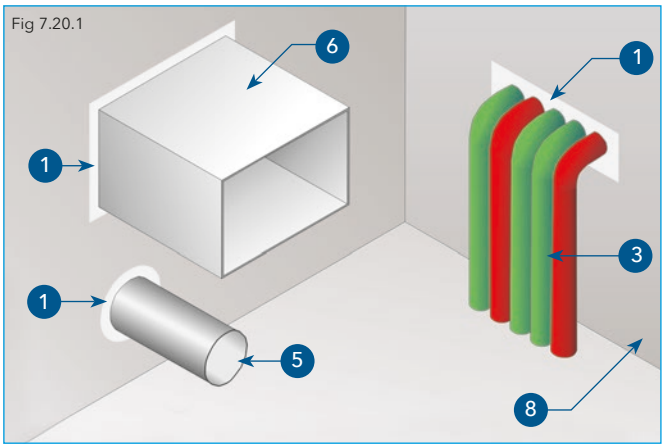

Fig 7.20.2

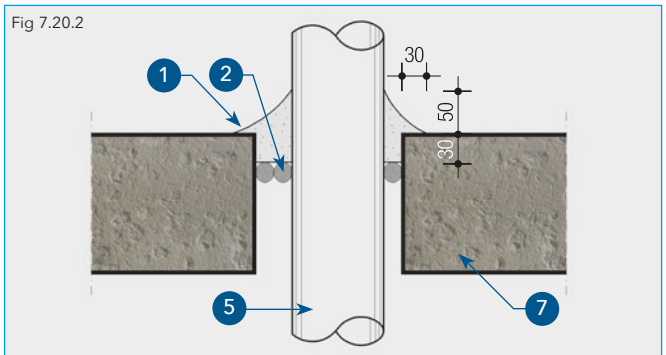

Detail 1 – Metal pipe through floors

Fig 7.20.3

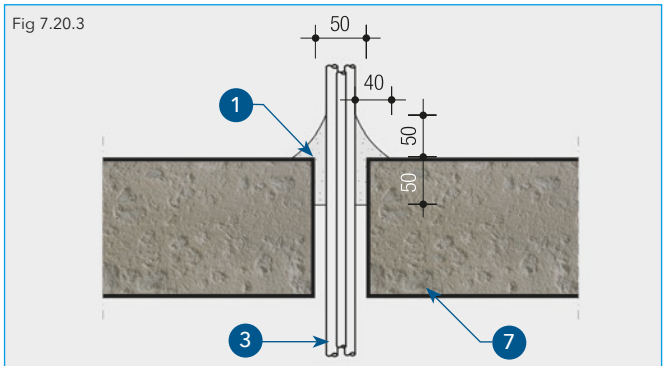

Detail 2 – Cables or tray through floors

Fig 7.20.4

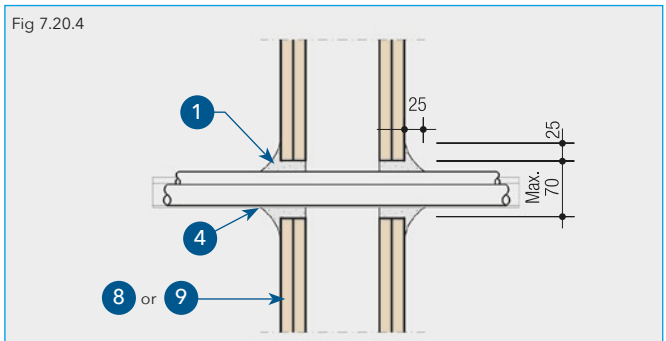

Detail 3 – Cable tray through masonry wall or partition

Fig 7.20.5

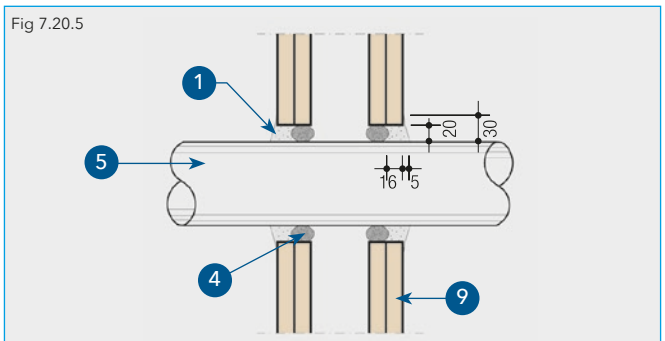

Detail 4 – Metal pipe through partitions

Chapter 7: Penetration Seals

Promat PROMASEAL® Sealants

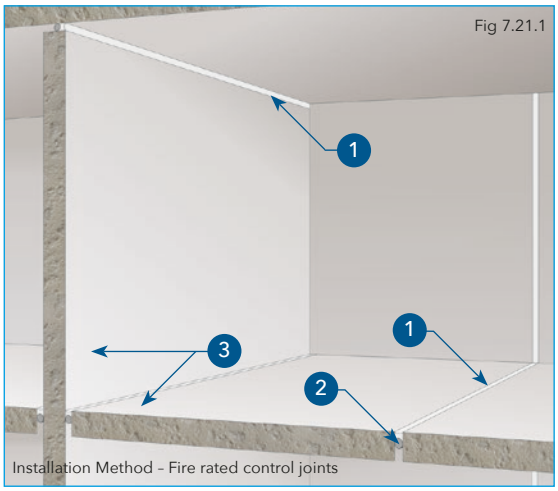

Fig 7.21.1

Installation Method – Fire rated control joints

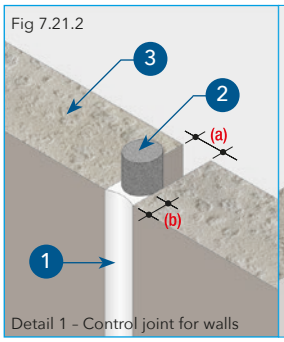

Fig 7.21.2

Detail 1 – Control joint for walls

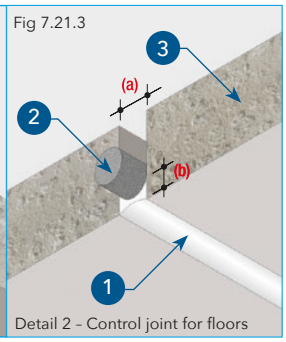

Fig 7.21.3

Detail 2 – Control joint for floors

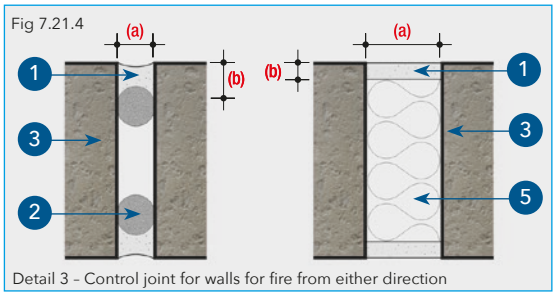

Fig 7.21.4

Detail 3 – Control joint for walls for fire from either direction

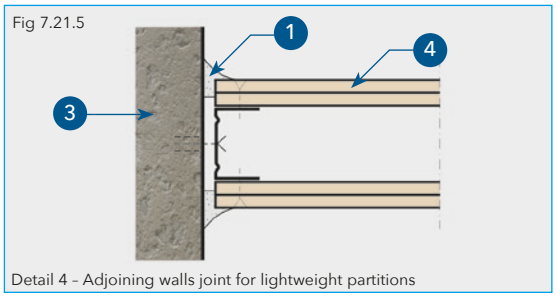

Fig 7.21.5

Detail 4 – Adjoining walls joint for lightweight partitions

CONTROL JOINTS

Promat PROMASEAL® sealants are intumescent acrylic or silicone based gunable sealants designed for fire resistant sealing of joints and services penetrations against spread of smoke, toxic gases and fire for up to 240 minutes fire resistance.

Adhesion is excellent to most types of surface. They cure in air to form a non-hardening, tack-free seal.

When specifying or sourcing a sealant for a control joint, it is essential that the characteristics of each control joint are taken into account. Control joints are provided either in or between elements of construction to allow for differential movement caused by a number of factors including shrinkage, thermal expansion, service loads, creep or as means of joining pre-cast units.

Promat PROMASEAL® Intumescent Acrylic or Silicone Sealants vary in their movement capabilities. As a general rule, acrylic sealants have low movement properties (typically between 5% and 10%) and should not be used where movement is a high priority. For good adhesion the surfaces of the building element must be free of any dust or grease and be suitably primed. Please contact Promat Technical Services Department for details. For high movement joints please refer to the section on Promat PROMASEAL® Expansion Joint Strip.

TECHNICAL DATA

Up to 240 minutes fire rating, integrity in accordance with the criteria of BS 476: Part 20: 1987.

1. Typical Promat PROMASEAL® Intumescent Acrylic Sealant or Silicone, sealing depth as below. Please check with the Promat Technical Services Department to ensure correct use of the sealant specified:
2. Polyethylene backing rod.
3. Concrete wall or floor.
4. Light weight fire rated partitions.
5. Rock wool.

Note: *For application on the unexposed face only, please contact Promat Technical Services Department.*

Promat PROMASEAL® Fire Compound

PRODUCT DESCRIPTION

Promat PROMASEAL® Fire Compound is a white powder, which is mixed with water to the required consistency for installation.

When set, Promat PROMASEAL® Fire Compound becomes a hard material with a white matt finish. The actual surface finish of the set product is dependent upon treatment at the time of application.

APPLICATION

Promat PROMASEAL® Fire Compound is used to provide a fire seal around service penetrations in walls and floors. The formless nature of the fire compound prior to setting allows it to be introduced between services and so create a complete void free seal, including around bunches of cables.

Promat PROMASEAL® Fire Compound is also ideal for use around pipes and ducts where these penetrate compartment or separating walls or floors.

Even when fully cured Promat PROMASEAL® Fire Compound permits the provision of additional or replacement services without the need to replace the complete installation, yet still retaining its strength properties. Acoustic data is available on this product, please contact the Promat Technical Services Department on 01344 381 400.

FIRE PERFORMANCE

The fire performance of Promat PROMASEAL® Fire Compound will depend upon the thickness of the finished seal. Promat PROMASEAL® Fire Compound has been tested to the procedures and adopting the criteria of BS 476: Part 20: 1987 for up to 240 minutes.

ADVANTAGES

- Fire tested for up to 240 minutes
- Easy to apply
- Proven method
- Compatible with all known building products
- Gas tight seal

INSTALLATION

General

Promat PROMASEAL® Fire Compound is mixed with water to the required consistency. The powder should always be added to the water to ensure complete wetting. As a guide, in wall applications a stiffer mix is required, thus it is suggested that a mixing ratio of 2 parts Promat PROMASEAL® Fire Compound to 1 part water (by volume) be used. Where a pouring grade is required it is suggested that the ratio should be 3 parts Promat PROMASEAL® Fire Compound to 2 parts water (by volume).

When movement of the services is expected it is good practice to point around the services with Promat PROMASEAL® Silicone Sealant. After setting, additional penetrations for services can be formed with normal hand tools. Redundant apertures can be readily filled with additional PROMASEAL® Fire Compound.

Certifire Approval No CF 425

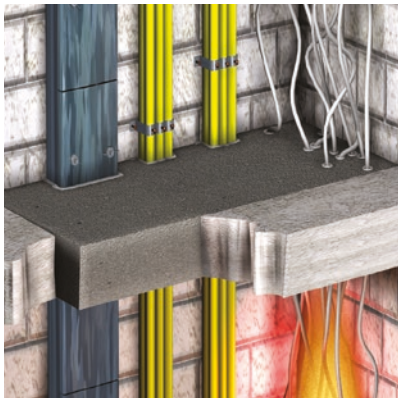

A safety data sheet is available from the Promat Technical Services Department and, as with any other materials, should be read before working with the product. The product is not classified as a dangerous substance and so no special provisions are required regarding the carriage and disposal of the product to landfill. This can be placed in an on-site skip with other general building waste which should be disposed of by a registered contractor.

Chapter 7: Penetration Seals

Promat PROMASEAL® Fire Compound

Installation Method 1

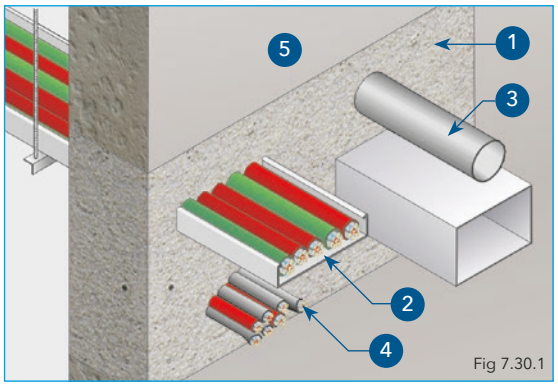

Fig 7.30.1

Installation Method 2

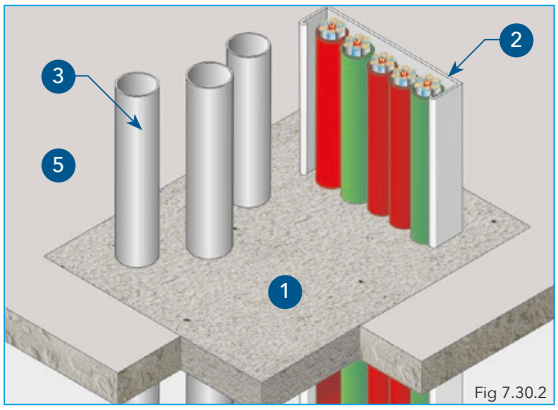

Fig 7.30.2

LOADBEARING SYSTEMS

Temporary foot traffic to maximum of 1.5kN/m² can be applied to Promat PROMASEAL® Fire Compound with additional reinforcement as required. Alternatively, use Promat PROMASEAL® Extra Strength Fire Compound. Please contact the Promat Technical Services Department for further information.

TECHNICAL DATA

240 minutes fire rating, integrity in accordance with the criteria of BS 476: Part 20: 1987. Insulation achieved will be dependent upon the building element and type of services.

1. PROMASEAL® Fire Compound :
   wall penetration = 100mm.
   floor penetration = 100mm.
2. Electrical cables and cable tray.
3. Metal pipe.
4. Telecommunication cables.
5. Wall elements or floor slabs.

Note: Maximum size of opening – Walls and floors 1.44m² (non-loadbearing).

Maximum size when reinforced for load bearing applications, please contact Promat Technical Services Department.

Larger openings and load bearing capabilities can also be protected. Please consult Promat Technical Services Department for support details.

Fig 7.30.3

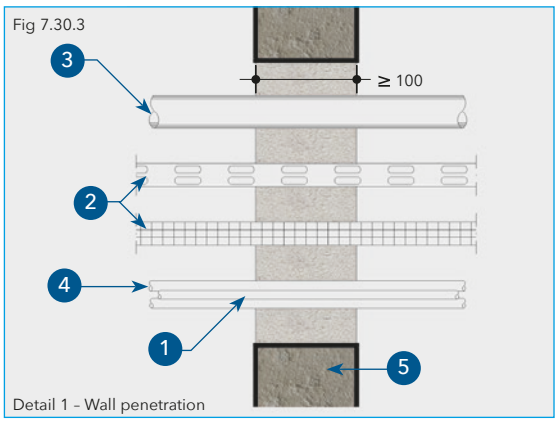

Detail 1 – Wall penetration

Fig 7.30.4

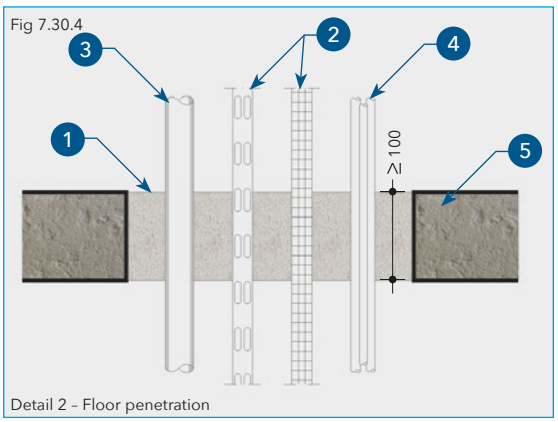

Detail 2 – Floor penetration

Promat PROMASEAL® Fire Compound

Certifire Approval No CF 425

Table 7c Promat PROMASEAL® Fire Compound - Approval Matrix						
Penetrating Services					Fire Rating (min)	
		Maximum Aperture Dimension (mm)	Minimum Seal Depth (mm)		Integrity	Insulation
			Loadbearing	Non-loadbearing		
Wall or floors	No service	1200	100	75	120	120
		1200	150	100	240	240
	Cables or Trunking or Dampers or Pipes ** (<60mm dia)	1200	100	75	120	0
		1200	150	100	240	0
Maximum Opening Area:	1.44m² with a maximum service loading of 25% within each penetration seal					
Wall thickness:	The floors and walls shall be a minimum of 100mm thick. The minimum density for the concrete of the floor or wall is 780kg/m³ and for walls made of concrete blocks is 600kg/m³.					
Application Technique:	Floors:	Temporary or permanent shuttering will be required. In all instances where the span of the Promat PROMASEAL® Fire Compound exceeds 600mm, additional reinforcement e.g. re-bars will be necessary. For the floor seals fitted with reinforcement, the bars shall be 12mm diameter at 150mm centres. They shall be positioned at mid-thickness and supported at their ends on steel angles, typically 30mm x 30mm x 1.2mm thick, which are fastened to the concrete floor with all steel expanding anchors, at maximum 500mm centres.				
	Walls:	Promat PROMASEAL® Fire Compound should be progressively built up in order to avoid slumping. Usually a single shuttering board is used.				
Service Support Requirements:	In all cases the services shall be supported adjacent to either face of thepenetration seal at maximum 500mm.					

*** Plastic pipes must be fitted with suitable fire protective collars or wraps.*
The concrete floors and/or masonry or concrete walls shall be at least as thick as the sealing system as shown in the Approval matrix and have at least the same fire rating as that required for the penetration seal.
The services which may be fitted through the seals are electrical cables of various sizes from communication cables to power cables. The cables may be mounted in steel trunking or conduits. If fitted in trunking, the inside of the trunking around the cables must be filled with Promat PROMASEAL® Fire Compound where it passes through the seal.
Other services which may be fitted through the seals are steel, copper or plastic pipes.
Plastic pipes must be fitted with intumescent closing devices, or similar, which have been shown by certification in the required orientation to be suitable for use with this type of penetration sealing system and suitable for the fire rating specified.

LIVE DOCUMENT - CONTACT PROMAT FOR LATEST DETAILS OR REFER TO CERTIFIRE WEBSITE

Chapter 7: Penetration Seals

Promat PROMASEAL® Fire Compound Extra Strength

Assessment No: BRE LPC CC 237371 PUKL

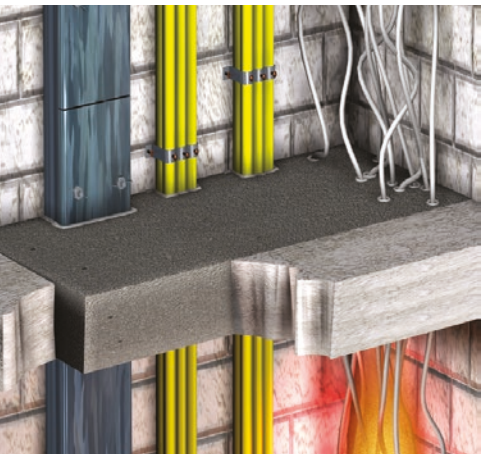

TYPICAL PROPERTIES

Colour:
Light Grey

Density loose bulk: **950 Kg/m³**

Density wet cast: **1750 - 1900 Kg/m³**

Density oven dry: **1450 - 1600 Kg/m³**

Setting time: **approx 1 hour**

Expansion on setting: **0.1%**

INTRODUCTION

Promat PROMASEAL® Fire Compound Extra Strength is a blend of high quality gypsum cement, fire resisting aggregates and additives, giving a compound with excellent fire resistance, combined with high strength, versatile workability and excellent acoustic insulation. Acoustic data is available on this product, please contact the Technical Services Department.

Promat PROMASEAL® Fire Compound Extra Strength is easily mixed with water to consistencies ranging from pourable, to stiff and trowelable, with controlled expansion on setting, giving a gas tight seal within the opening and around services.

LOADBEARING FLOOR SEALS

In a concrete floor slab opening, the unique combination of structural properties of the Promat PROMASEAL® Fire Compound Extra Strength seal enables it to support a load of several tonnes, even across quite large spans, without reinforcement. Please note that Promat PROMASEAL® Fire Compound Extra Strength is intended to support temporary loading e.g. foot traffic and not permanent loading.

STRUCTURAL SEALS AROUND FIRE DAMPERS

When installed around fire damper units the excellent crushing strength and shear resistance of Promat PROMASEAL® Fire Compound Extra Strength ensures that the installation frame will be retained in the wall or floor, if the ductwork should collapse, even when the damper frame is not tied back to the structure.

Table 7d				
Flexural Strength F rupture at 28 days				
Compound: Water ratio 2.5:1			5.2N/mm²	
Compressive Strength at 28 days				
Compound: Water ratio 2.5:1 - pourable			14.0N/mm²	
Compound: Water ratio 3.0:1 - stiff			21.0N/mm²	
** Compound: water ratio by volume*				
Fire Performance				
		Depth of seal (mm)	Insulation (mins)	Integrity (mins)
Cables & Pipework	through floors (EN 1366-3)	100	231	240
Ductwork Dampers	through floors	90	225	240
	through walls (BS 476 Part:20)	82	164	240
Loadbearing Capacity at 48 hours				
Un-reinforced floor seal, mix ratio 2.5:1	Span of Seal (mm)	Span/Depth Ratio (100mm deep floor seal)	Tensile Failure Pressure (kN/m²) (one way spanning)	*Safe Working Load (kN/m²)
	900	9:1	30	10
	1200	12:1	25	8
	1500	15:1	15	5
** Safe working load of the floor seal is taken as one third of the tensile failure pressure. Safe working load is for temporary foot traffic not permanent loading.*				

LIVE DOCUMENT - CONTACT PROMAT FOR LATEST DETAILS OR REFER TO CERTIFIED WEBSITE

Promat PROMASEAL® Fire Compound Extra Strength

MIXING PROCEDURE
Mix with clean water in a plastic container. Slowly add the dry powder to water while stirring by hand or power mixer to ensure a smooth lump-free mix.

RECOMMENDED MIXES

Compound	Water (by volume)
Floor Openings	2.5:1
Wall Openings	3.0:1

Do not attempt to remix by adding more water after the compound has started to set.

Using dirty mixing buckets can accelerate setting and result in a weak compound.

Note: The wet mix will remain useable for approximately 45-60 minutes depending on batch size, water content and temperature. Any spillage should be wiped up with a damp cloth before setting occurs.

FLOOR OPENINGS
When sealing holes in floor slabs, appropriate shuttering must be installed, cut to fit tightly around any services within the opening, to support the wet mix until it sets. Combustible materials i.e. timber shuttering must be removed, after the mix has set.

For complex penetrations it may be preferable to initially form a thin seal around all the services, with a nominal 5mm layer of the compound mix. Once this has set, the remaining depth of seal should be poured in one operation.

Building up the seal in several operations with the individual layers being allowed to set, will result in a weak laminated structure with severely reduced load bearing performance.

YIELD
Approximately 7 x 20kg bags per m² at 100mm thick.

HEALTH AND SAFETY
Contains gypsum plaster and natural aggregates. Wear appropriate protective clothing, including gloves, dust mask, safety glasses, especially during mixing, to guard against dust inhalation, eye damage and skin irritation. Safety data sheets are available from Promat Technical Services Department.

PACKAGING
20kg bags.

STORAGE
Must be stored in dry conditions. Shelf life, in unopened bag, at least 6 months.

TECHNICAL SERVICES
For additional technical support, please contact Promat Technical Services Department.

A safety data sheet is available from the Promat Technical Services Department and, as with any other materials, should be read before working with the product. The product is not classified as a dangerous substance and so no special provisions are required regarding the carriage and disposal of the product to landfill. This can be placed in an on-site skip with other general building waste which should be disposed of by a registered contractor.

Chapter 7: Penetration Seals

Promat PROMASEAL® Fire Barrier

Certifire Approval No CF 426

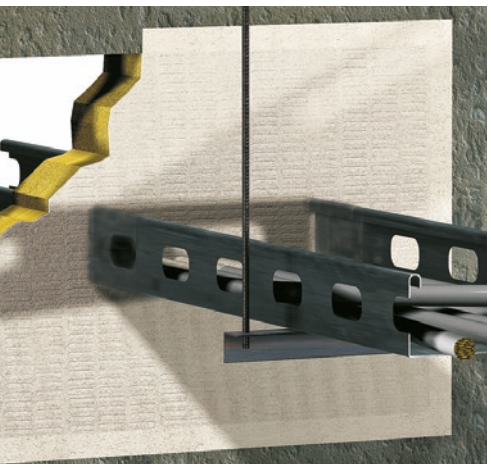

A safety data sheet is available from the Promat Technical Services Department and, as with any other materials, should be read before working with the product. The product is not classified as a dangerous substance and so no special provisions are required regarding the carriage and disposal of the product to landfill. This can be placed in an on-site skip with other general building waste which should be disposed of by a registered contractor.

PRODUCT DESCRIPTION

Promat PROMASEAL® Fire Barriers are slabs of high density rock wool with a white endothermic, ablative coating.

APPLICATION

Promat PROMASEAL® Fire Barriers are used to stop the spread of fire through openings in fire resistant walls and floors where these are used for the passage of building and communications services. Acoustic data is available on this product, please contact the Technical Services Department.

FIRE PERFORMANCE

Promat PROMASEAL® Fire Barriers have been shown to provide a resistance to fire of 240 minutes when tested in accordance with the principles of BS 476: Part 20: 1987.

60 minute Promat PROMASEAL® Fire Barriers (walls only)

120 minute Promat PROMASEAL® Fire Barriers (walls and floors)

240 minute Promat PROMASEAL® Fire Barriers (walls only)

Please refer to tables 7e, 7f, 7g and 7h for specific details of periods of fire resistance (integrity and insulation).

ADVANTAGES

- Tested up to 240 minutes (walls) and 120 minutes (floors)
- Easily installed
- Allows fitting of additional services after installation
- Lightweight
- Easily cut to size
- Low smoke emission

INSTALLATION

Promat PROMASEAL® Fire Barriers are designed to be installed within openings in masonry , concrete or stud partition walls. The Promat PROMASEAL® Fire Barrier is cut to size such that a firm friction fit is achieved. Using a trowel or pallet knife, apply a layer of Promat PROMASEAL® Fire Barrier Coating to the areas in contact with the opening and also 'buttered' onto the edges of the batt.

Where Promat PROMASEAL® Fire Barrier batts are cut to accommodate passage of services through the batt, the batt should be cut tight-fit into the opening and tight-fit around the service penetrations.

Promat PROMASEAL® Fire Barrier Coating must be used to point-in any service penetrations through the batt.

Services should be supported no more than 500mm from both sides of the Fire Barrier. Cables and services do not need coat back.

Promat PROMASEAL® Fire Barrier

TECHNICAL DATA

120 minutes fire rating, integrity in accordance with the criteria of BS 476: Part 20: 1987.

1. Promat PROMASEAL® Fire Barrier Coating, nominal 2mm thick.
2. Promat PROMASEAL® Fire Barrier (non-loadbearing) 50mm thick.
3. Cable trays.
4. Suspension or support of cable trays.
5. Cables, cable bunches, optical waveguides, metal pipes or service trunking.
6. Brickwork or concrete walls, with fire resistance to the same or greater than the fire resistance of the installed Fire Barrier system.
7. Light weight partitions, with fire resistance to the same or greater than the fire resistance of the installed Fire Barrier system.
8. Solid slab, with fire resistance to the same or greater than the fire resistance of the installed system.

Detail 1 Solid Wall – Promat PROMASEAL® Fire Barrier System may be mounted in brickwork, concrete or lightweight walls to a minimum 130mm thick, provided the fire resistance is higher or equal to the installed system.

For installations in thicker walls, Promat PROMASEAL® Fire Barrier can be arranged as a flush surface on both sides with a suitable gap in between. For cable seals, the cable trays have to be supported on both sides 500mm before the wall opening (4).

Detail 2 Lightweight Partition – The lightweight partitions should be tested to BS 476: Part 22: 1987 to the same or greater period of fire resistance as the Fire Barrier System.

Detail 3 Floor Penetration – Typical arrangement of cable trays within Promat PROMASEAL® Fire Barrier System.

Certifire Approval No CF 426

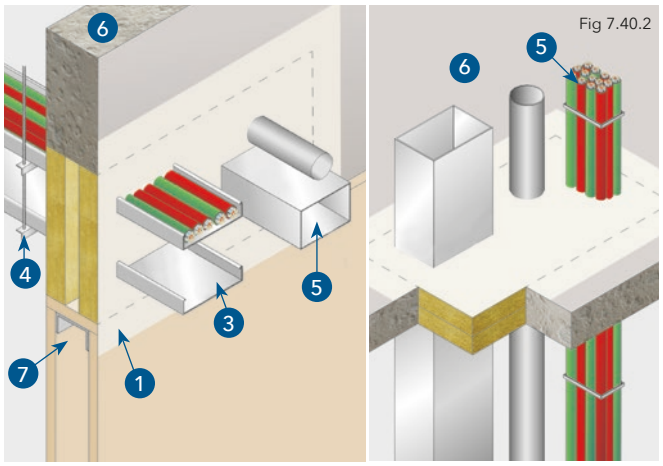

Fig 7.40.3

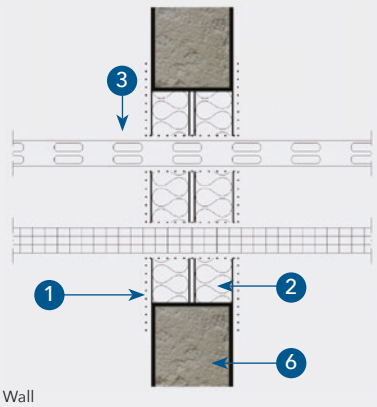

Detail 1 – Solid Wall

Fig 7.40.4

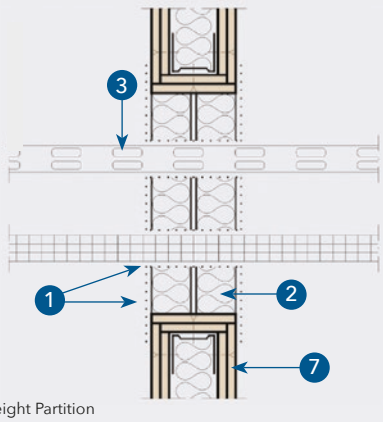

Detail 2 – Lightweight Partition

Fig 7.40.5

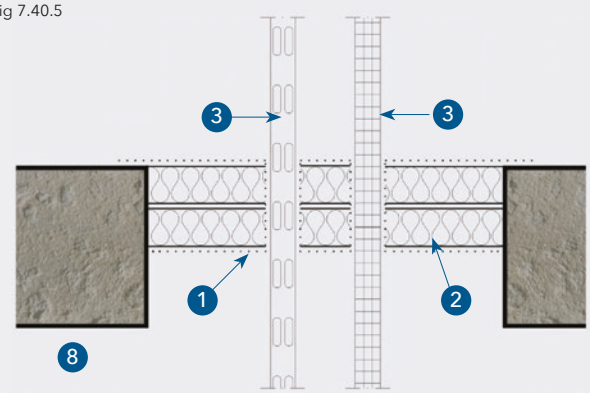

Detail 3 – Floor Penetration

Chapter 7: Penetration Seals

Promat PROMASEAL® Fire Barrier

Certifire Approval No CF 426

Table 7e Approval Matrix - Up To 60 Minute Walls			
Barrier	Service	Integrity	Insulation
Single layer (50mm)	Cable Ladder (340mm wide by 100mm high max.)	60 minutes	60 minutes
	Cables up to 26mm diameter	60 minutes	N/A
	Steel pipes up to 60mm diameter	60 minutes	30 minutes
	PVC pipes up to 110mm diameter*	60 minutes	N/A
	Steel ducts (445 mm wide by 445mm high max.)	60 minutes	N/A
** PVC pipes must be used in conjunction with Promat PROMASEAL® Pipe wraps over sealed with Promat PROMASEAL® Fire Barrier coating.*			
Maximum Aperture:	2880mm high by 1440mm. Multiple apertures must be separated by a minimum of 400mm in drywalls and 240mm in concrete/masonry constructions.		
Walls:	The walls shall be a minimum of 66mm thick. The minimum density for the concrete or brick of the wall is 780kg/m³ and for walls made of concrete blocks is 600kg/m³. Partition drywalls will comprise at least 1 layer of minimum 12.5 thick Type 'F' gypsum board on each side of minimum 70mm by 32mm steel studs. Promat SUPALUX® steel stud drywalls as specified in Certifire Approval CF420A will comprise at least 1 layer of minimum 9mm thick Promat SUPALUX® board on each side of minimum 48mm by 35mm steel studs. For further details of this construction CF420A should be consulted. All concrete, masonry or drywalls shall have at least the same fire rating as that required for the barrier.		
Application Technique:	Concrete/Masonry walls:	Batts tightly friction fitted into the aperture at mid-depth of the wall. Batt joints and the batt to aperture junction is sealed with Promat PROMASEAL® Fire Barrier Coating. Apertures for penetrating items are to be tightly fitting and be sealed with Promat PROMASEAL® Fire Barrier Coating and must be separated by at least 400mm.	
	Gypsum Drywalls:	As above and additionally the aperture must be formed from track sections and be lined with two layers of 12.5mm thick Type 'F' gypsum boards.	
	Promat SUPALUX® Drywalls:	As above and apertures must be formed from track sections and be lined with a layer of minimum 9mm thick Promat SUPALUX® board.	
Service Coat-Back:	Not required.		
Service Support Requirements:	Services should be rigidly supported via steel angles, hangers or channels, not further than 500mm from the surface of the sealing system on both faces.		

CONTACT PROMAT FOR LATEST DETAILS
LIVE DOCUMENT
OR REFER TO OUR WEBSITE

Promat PROMASEAL® Fire Barrier

Certifire Approval No CF 426

Table 7f Approval Matrix - Up To 120 Minute Walls			
Barrier	Service	Integrity	Insulation
Single layer (50mm)	Cable Ladder (340mm wide by 100mm high max.)	120 minutes	60 minutes
	Cables up to 26mm diameter	120 minutes	N/A
	Steel pipes up to 60mm diameter	120 minutes	30 minutes
	PVC pipes up to 110mm diameter*	120 minutes	N/A
	Steel ducts (445 mm wide by 445mm high max.)	120 minutes	N/A
Double layer (100mm) 2 x 50mm	Cable Ladder (340mm wide by 100mm high max.)	120 minutes	60 minutes
	Cables up to 26mm diameter	120 minutes	60 minutes
	Steel pipes up to 60mm diameter	120 minutes	30 minutes
	PVC pipes up to 110mm diameter*	60 minutes	N/A
	Steel ducts (445 mm wide by 445mm high max.)	120 minutes	N/A
** PVC pipes must be used in conjunction with Promat PROMASEAL® Pipe wraps over sealed with Promat PROMASEAL® Fire Barrier coating.*			
Maximum Aperture:	2400mm high by 1200mm (120 minutes integrity performance) 2880mm high by 1440mm (60 minutes integrity performance) Multiple apertures must be separated by a minimum of 400mm in drywalls and 240mm in concrete/ masonry constructions.		
Walls:	The walls shall be a minimum of 130mm thick. The minimum density for the concrete or brick of the wall is 780kg/m³ and for walls made of concrete blocks is 600kg/m³. Partition drywalls will comprise at least 2 layers of 15mm thick Type 'F' gypsum boards on each side of minimum 70mm by 32mm steel studs. All concrete, masonry or drywalls shall have at least the same fire rating as that required for the barrier.		
Application Technique:	Concrete/Masonry walls:	Batts tightly friction fitted into the aperture at mid-depth of the wall. Batt joints and the batts to aperture junction is sealed with Promat PROMASEAL® Fire Barrier Coating. Apertures for penetrating items are to be tightly fitting and be sealed with Promat PROMASEAL® Fire Barrier Coating and must be separated by at least 400mm.	
	Drywalls:	As above and additionally the aperture must be formed from track sections and be lined with two layers of 12.5mm thick Type 'F' gypsum boards.	
	Promat SUPALUX® Drywalls:	As above and additionally the aperture must be formed from track sections and be lined with two layers of 15mm thick Type 'F' gypsum boards.	
Service Coat-Back:	Not required.		
Service Support Requirements:	Services should be rigidly supported via steel angles, hangers or channels, not further than 500mm from the surface of the sealing system on both faces.		

UNCONTROLLED DOCUMENT - CONTACT PROMAT FOR LATEST DETAILS OR REFER TO CERTIFIRE WEBSITE

Promat PROMASEAL® Fire Barrier

Certifire Approval No CF 426

Table 7g Approval Matrix - Up To 240 Minute Walls				
Barrier	Service		Integrity	Insulation
Single layer (50mm)	Cable Ladder (340mm wide by 100mm high max.)		240 minutes	N/A
	Cables up to 20mm diameter		240 minutes	N/A
Double layer (100mm) 2 x 50mm	Cable Ladder (340mm wide by 100mm high max.)		240 minutes	60 minutes
	Cables up to 20mm diameter		240 minutes	60 minutes
Maximum Aperture:	1000mm high and 660 mm wide subject to a maximum area of 0.6m². Multiple apertures must be separated by a minimum of 240mm in concrete/masonry constructions.			
Walls:	The walls shall be a minimum of 140mm thick. The minimum density for the concrete or brick of the wall is 780kg/m³ and for walls made of concrete blocks is 600kg/m³. All concrete or masonry walls shall have at least the same fire rating as that required for the barrier.			
Application Technique:	Concrete/Masonry walls:	Batts tightly friction fitted into the aperture at mid-depth of the wall. Batt joints and the batts to aperture junction is sealed with PROMASEAL® Fire Barrier Coating coating. Apertures for penetrating items are to be tightly fitting and be sealed with Promat PROMASEAL® Fire Barrier Coating and must be separated by at least 240mm.		
Service Coat-Back:	Not required.			
Service Support Requirements:	Services should be rigidly supported via steel angles, hangers or channels, not further than 500mm from the surface of the sealing system on both faces.			

Table 7h Approval Matrix - Up To 120 Minute Floors				
Barrier	Service		Integrity	Insulation
Double layer (100mm)	Cable Ladder (340mm wide by 100mm high max.)		120 minutes	60 minutes
	Cables up to 20mm diameter		120 minutes	60 minutes
Maximum Aperture:	1200mm long and 600mm wide subject to a maximum area of 0.72m². Multiple apertures must be separated by a minimum of 240mm in concrete constructions.			
Floors:	The floors shall be a minimum of 115mm thick. The minimum density for the concrete floor is 780kg/m³. All concrete floors shall have at least the same fire rating as that required for the barrier.			
Application Technique:	Concrete floors:	Batts cut to size (not jointed) and tightly friction fitted into the aperture at mid-depth of the wall. Batt to aperture junction is sealed with Promat PROMASEAL® Fire Barrier Coating and must be separated by at least 240mm.		
Service Coat-Back:	Not required.			
Service Support Requirements:	Services should be rigidly supported via steel angles, hangers or channels, not further than 500mm from the surface of the sealing system on both faces.			

LIVE DOCUMENT - CONTACT PROMAT FOR LATEST DETAILS OR REFER TO CERTIFIRE WEBSITE

Promat PROMASEAL® Fire Barrier

Certifire Approval No CF 427

PRODUCT DESCRIPTION

Promat PROMASEAL® Fire Pillows can provide permanent protection from the spread of fire, but they are particularly useful when only temporary protection is required.

Promat PROMASEAL® Fire Pillows have been successfully fire tested up to 120 minutes.

APPLICATIONS

Promat PROMASEAL® Fire Pillows are used to maintain the fire resistance of walls and floors where openings for services are located. They are typically installed around cables which need to be regularly altered.

FIRE PERFORMANCE

Promat PROMASEAL® Fire Pillows have been tested in accordance with the principles of BS 476: Part 20: 1987.

When exposed to fire the pillow contents expand to fill even the smallest gaps around services, creating a rigid barrier against the spread of smoke, toxic gases and fire.

ADVANTAGES

- Fire protection for up to 120 minutes in walls and 120 minutes in floors
- Simple installation
- Re-usable
- Waterproof
- No additional material required
- Suitable for clean room applications
- Maintenance free
- Allows rearrangement of services
- Non-toxic
- Attractive, professional appearance
- Resistant to vermin and rot

INSTALLATION

Promat PROMASEAL® Fire Pillows are normally installed by laying in courses to completely fill the gaps around penetrations. Where required to form adequate overlap, the smaller sized pillow, 330mm x 200mm x 25mm, may be used at ends of layers of pillows.

Where, for example, non-combustible pipes or cables penetrate the Promat PROMASEAL® Fire Pillows installation, care should be taken to ensure that a good seal is formed around such penetrations by the use of smaller Promat PROMASEAL® Fire Pillows compressed into the gaps.

When installing the final layer of Promat PROMASEAL® Fire Pillows it is advisable to insert it between the previous two layers by pulling it into position using the flap located at one end of each pillow. This provides a tighter seal than trying to insert the final layer as the uppermost layer.

Chapter 7: Penetration Seals

Promat PROMASEAL® Fire Pillow

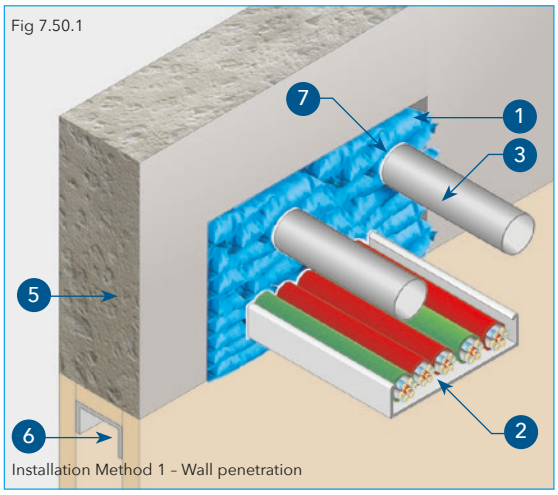

Fig 7.50.1

Installation Method 1 – Wall penetration

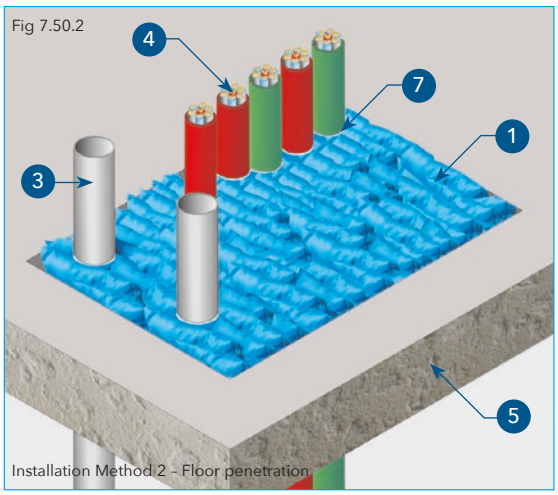

Fig 7.50.2

Installation Method 2 – Floor penetration

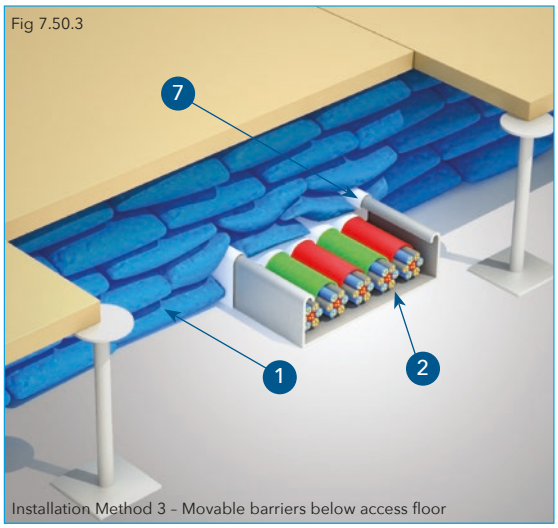

Fig 7.50.3

Installation Method 3 – Movable barriers below access floor

Promat PROMASEAL® Fire Pillows should be positioned either vertically or horizontally with their 330mm length at right angles to the wall. After consultation with Promat Technical Services Department it may be possible to adjust the orientation of the pillows to provide the most economical use of the pillows. It is however important to ensure that pillows overlap by at least 50mm. It is normally advisable to ensure that any services are supported within 500mm of the wall.

PENETRATION SEALS ON FLOORS, SLABS OR WALLS

Promat PROMASEAL® Fire Pillows consist of quality woven envelopes enclosing high temperature, fire resistant granulated material. They are simple to install, are re-usable and maintenance free.

The pillows are used to maintain the fire resistance of walls and floors, where openings for services are located. They are typically installed around cables which need to be regularly altered.

DELIVERY FORM

330mm x 200mm x 45mm (large fire pillow)
330mm x 200mm x 25mm (small fire pillow)
330mm x 50mm x 20mm (finger pillow)

TECHNICAL DATA

120 minutes fire rating, integrity in accordance with the criteria of BS 476: Part 20: 1987.

1. Promat PROMASEAL® Pillows.
2. Electrical cables and cable tray.
3. Steel pipes.
4. Telecommunication cables.
5. Wall or floor elements.
6. Lightweight partition.
7. Gap seal with Promat PROMASEAL® Intumescent Acrylic Sealant.

Note: To ensure a smoke tight construction, any visible gaps between pillows should be filled with Promat PROMASEAL® Sealant. All services passing through the pillows should be sealed using Promat PROMASEAL® Sealant to prevent the passage of smoke.

For semi permanent installation, enclose with steel wire mesh or seal with Promat PROMASEAL® Sealant. For further details, please contact the Promat Technical Services Department.

Promat PROMASEAL® Fire Pillow

Certifire Approval No CF 427

Table 7i Promat PROMASEAL® Fire Pillows - Approval Matrix						
Orientation	Services	Integrity/ Insulation	Required Pillow Thickness for Fire Resistance			
			30 mins	60 mins	90 mins	120 mins
Floor	No	Int. & Ins.	150mm	150mm	200mm	200mm
	Yes	Int. & Ins.	150mm	200mm	250mm	300mm
	Yes	Int. only	150mm	150mm	200mm	200mm
Wall	No	Int. & Ins.	150mm	180mm	250mm	300mm
	Yes	Int. & Ins.	150mm	200mm	250mm	300mm
	Yes	Int. only	180mm	180mm	250mm	300mm
Penetrating Services:	Cable ladders and communication cables					
Maximum Aperture:	1000mm by 1000mm					
Wall/floor Thickness:	The floors and walls shall be a minimum of 100mm thick for periods of up to 60 minutes fire resistance and 150mm (floor) and 200mm (wall) thick for periods of 90 minutes and 120 minutes fire resistance. The minimum density for the concrete of the floor or wall is 780kg/m³ and for walls made of concrete blocks is 600kg/m³.					
Application Technique:	Floors:	Steel mesh (50mm square with 5mm wire) is mechanically fixed either to the soffit of the floor or within the reveal of the aperture via vertical returns at the edges of the mesh. The fire pillows are tightly packed into the opening and around the services.				
	Walls:	The fire pillows are tightly packed into the opening and around the services (no mesh is required).				
Service Coat-Back:	Not required					
Service Support Requirements:	Services should be rigidly supported via steel angles, hangers or channels, not further than 500mm from the surface of the sealing system on both faces.					
Note: The concrete floors and/or masonry or concrete walls shall be at least as thick as the sealing system as shown in the Approval matrix and have at least the same fire rating as that required for the penetration seal. The services which may be fitted through the seals are cable ladders of various sizes and communication cables.						

A safety data sheet is available from the Promat Technical Services Department and, as with any other materials, should be read before working with the product. The product is not classified as a dangerous substance and so no special provisions are required regarding the carriage and disposal of the product to landfill. This can be placed in an on-site skip with other general building waste which should be disposed of by a registered contractor.

LIVE DOCUMENT - CONTACT PROMAT FOR LATEST DETAILS OR REFER TO CERTIFIRE WEBSITE

Chapter 7: Penetration Seals

Promat PROMASEAL® Pipewrap

DELIVERY FORM

Promat PROMASEAL® Pipewrap is available in a range of sizes to suit all commonly used plastic pipes up to 160mm diameter.

The four standard sizes are as follows:

55mm (all pipes up to 55mm internal diameter)

82mm (all pipes up to 82mm internal diameter)

110mm (all pipes up to 110mm internal diameter)

160mm (all pipes up to 160mm internal diameter)

Each wrap is 60mm wide

A safety data sheet is available from the Promat Technical Services Department and, as with any other materials, should be read before working with the product. The product is not classified as a dangerous substance and so no special provisions are required regarding the carriage and disposal of the product to landfill. This can be placed in an on-site skip with other general building waste which should be disposed of by a registered contractor.

PRODUCT DESCRIPTION

Promat PROMASEAL® Pipewrap consists of water resistant sleeve around a flexible intumescent core.

APPLICATIONS

Promat PROMASEAL® Pipewrap prevents the passage of smoke, toxic gases and fire through gaps in compartment walls and floors caused by the collapse and/or melting of combustible services in the event of fire.

Promat PROMASEAL® Pipewrap is used to maintain the fire resistance of walls and floors when they are penetrated by combustible pipework such as PVC drainage pipes, and can also be used around groups of cables.

FIRE PERFORMANCE

Promat PROMASEAL® Pipewrap has been successfully tested and assessed in floor and wall constructions for 240 minutes fire resistance. Tests were carried out in accordance with the procedures of BS 476: Part 20: 1987.

ADVANTAGES

- Fire tested up to 240 minutes
- Easy to install.
- Flexible
- Water resistant
- Range of sizes
- Lightweight
- Use in restricted location when pipe collars are impractical
- No additional components required
- Non-corrosive
- Abrasion resistant
- No mechanical fixing
- Rot and vermin resistant
- Allows small movement of pipe within wall or floor

INSTALLATION

General

Promat PROMASEAL® Pipewrap is always installed within walls or floors into a prepared opening.

The Promat PROMASEAL® Pipewrap is wrapped around the pipe to be protected and secured tightly in position by means of adhesive tab. It is then slid along the pipe until it is contained within the prepared opening. The Promat PROMASEAL® Pipewrap is grouted into position using Promat PROMASEAL® Fire Compound.

A single Promat PROMASEAL® Pipewrap should be fixed in the anticipated fire side of the wall or floor. Any cavity around the Promat PROMASEAL® Pipewrap should be filled with Promat PROMASEAL® Fire Compound.

When there is a risk of fire from both sides, two wraps should be used to allow the intumescent material to be flush with each face of the wall or floor. Normally, one can assume that a floor will only require to resist fire from below, and therefore will require one wrap.

As each wrap is 60mm wide, only one wrap is required for walls or floors 100mm thick, even if there is risk of fire from both sides. Normally, walls and floors of this thickness will only provide 60 minutes fire resistance.

Promat PROMASEAL® Pipewrap

Certifire Approval No CF 430

Table 7j Promat PROMASEAL® Pipewrap - Approval Matrix				
PVC Pipe Size	Wrap size	Wall/Floor Thickness	Integrity	Insulation
55mm Ø by 4.0mm wall thickness	60 by 6mm	100mm	60 minutes	N/A
82mm Ø by 4.0mm wall thickness	60 by 9.5 mm or 60 by 6.0mm (wall only)	100mm	60 minutes	N/A
110mm Ø by 4.0mm wall thickness	60 by 12 mm* or 60 by 9.5mm (wall only)	100mm	60 minutes	N/A
160mm Ø by 4.5mm wall thickness	100 by 11.4mm*	100mm	60 minutes	N/A
55mm Ø by 4.0mm wall thickness	60 by 6mm	150mm	240 minutes	180 minutes
63mm Ø by 3.2mm wall thickness	60 by 3.5mm	150mm	180 minutes	180 minutes
82 mm Ø by 4.0mm wall thickness	60 by 9.5mm or 60 by 6.0mm (wall only)	150mm	240 minutes	180 minutes
110mm by 3.2mm wall thickness	60 by 6mm	150mm	180 minutes	180 minutes
110mm by 4.0mm wall thickness	60 by 12mm* or 60 by 9.5mm (wall only)	150mm	240 minutes	N/A
160mm Ø by 4.5mm wall thickness	100 by 11.4 mm*	150mm	240 minutes	N/A
MDPE Pipe Size	Wrap size	Wall/Floor Thickness	Integrity	Insulation
63mm Ø by 6.5mm wall thickness	60 by 3.5mm	150mm	240 minutes	240 minutes
90mm Ø by 9mm wall thickness	60 by 6mm	150mm	240 minutes	240 minutes
HDPE Pipe Size	Wrap size	Wall/Floor Thickness	Integrity	Insulation
110mm Ø by 7mm wall thickness	60 by 6mm	150mm	240 minutes	240 minutes
ABS Pipe Size	Wrap size	Wall/Floor Thickness	Integrity	Insulation
160mm Ø by 10.5mm wall thickness	60 by 6mm + 60 by 3.5mm (Floor only)	150mm	240 minutes	240 minutes
* can be inserted within a multi-filament woven reinforced sock if desired for ease of installation.				
Maximum Aperture:	183mm Ø			
Walls/Floors	The walls and floors shall be a minimum of 100 mm thick for periods of up to60 minutes integrity performance and 150 mm thick for periods of up to240 minutes integrity. The minimum density for the concrete or brick of the wall is 780kg/m³ and for walls made of concrete blocks is 600kg/m³. All concrete, masonry or drywalls shall have at least the same fire rating as that required for the barrier.			
Application Technique:	Concrete/masonry walls and floors:	The Promat PROMASEAL® Pipewrap is wrapped around the pipe and secured tightly with the adhesive tab. The wrap is then slid along the pipe into the wall or floor aperture and grouted into position using Promat PROMASEAL® Fire Compound.		
Service Coat-Back	Not required			
Service Support Requirements:	Services should be rigidly supported via steel angles, hangers or channels, not further than 500 mm from the surface of the sealing system on both faces.			
Note: The concrete floors and masonry or concrete walls shall be at least 100mm thick and have at least the same fire rating as that required for the penetration seal. *The services which may be fitted through the seals are PVC MDPE, HDPE and ABS pipes of various sizes, as detailed within the above Approval Matrix.*				

LIVE DOCUMENT - CONTACT PROMAT FOR LATEST DETAILS OR REFER TO CERTIFIREWEBSITE

Chapter 7: Penetration Seals

Promat PROMASEAL® Expansion Joint Strip

Installation Method 1 – Sealing movement joints at junctions for walls and floors.

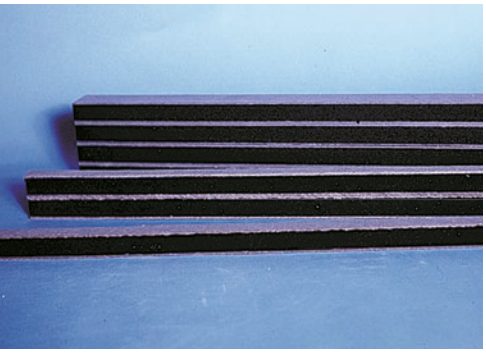

A safety data sheet is available from the Promat Technical Services Department and, as with any other materials, should be read before working with the product. The product is not classified as a dangerous substance and so no special provisions are required regarding the carriage and disposal of the product to landfill. This can be placed in an on-site skip with other general building waste which should be disposed of by a registered contractor.

PRODUCT DESCRIPTION

Promat PROMASEAL® Expansion Joint Strips are highly compressible, flexible, fire resistant seals which are used where movement joints are formed in the structure of a building.

Promat PROMASEAL® Expansion Joint Strips consist of layers of intumescent material bonded to Class 0 foam.

Promat PROMASEAL® Expansion Joint Strips have been successfully fire tested and assessed for up to 240 minutes in joints in walls and floors.

APPLICATIONS

Promat PROMASEAL® Expansion Joint Strips are ideal for sealing movement joints at junctions between compartment walls and floors and within walls and floors. Their flexibility makes them suitable for use in a variety of configurations.

FIRE PERFORMANCE

The fire performance of Promat PROMASEAL® Expansion Joint Strips will vary according to the particular application. In addition the width of the gap into which the Promat PROMASEAL® Expansion Joint Strips will be inserted as well as their orientation will have an effect on the level of protection provided.

ADVANTAGES

- Provides up to 240 minutes fire resistance (integrity)
- Allows joints to move
- Simple dry fixing
- Water resistant
- Discreet
- Workable 1 metre lengths
- Resistant to most chemicals

INSTALLATION

The strip dimension is determined by the minimum and maximum positions of the joint width expected during the life of the building. The strip width (t) should not be less than the maximum expected joint width. The strip depth is a function of the joint width and the fire resistance period.

The appropriate size of Promat PROMASEAL® Expansion Joint Strip is simply compressed between fingers and thumb until it can be inserted into the required gap. For up to 120 minutes fire resistance only one strip is required. The strip must be centrally located in the wall or floor joint. In cold conditions it is advisable to store in a warm atmosphere immediately prior to installation as this improves compressibility. The strip may readily be cut to suit a particular length.

When more than one length of Promat PROMASEAL® Expansion Joint Strip is required in a joint, ensure the two pieces are butted tight together and there is no gap between the adjoining ends. At the ends of each joint, ensure the strip is fitted tight to the adjoining surface. For situations not covered by the table below, please consult the Promat Technical Services Department.

Promat PROMASEAL® Expansion Joint Strip

Table 7k Promat PROMASEAL® Expansion Joint Strip						
Blockwork/Masonry/Concrete (aerated or normal) Wall and Floor Installations 150mm thick (min.)						
Product Name	Promat PROMASEAL® Expansion Joint Strip					
Strip Size	Max. Joint width mm (g)	Min. Seal width mm (t)	Min. Seal Depth mm (d)	Number of Intumescent Strips	Number/ Width of Foam Strips mm	Integrity (mins)
4009053	10	12	12	1	1 x 10	120
4009055	20	29	12	2	1 x 25	120
4009039	25	32	20	2	1 x 30	120
4009040	35	53	20	3	2 x 25	120
4009041	50	61	35	3	1 x 25 + 1 x 30	120
4009042	75	90	50	4	1 x 25 + 2 x 30	120
4009043	100	126	100	5	4 x 30	120
4009044	120	147	125	6	2 x 25 + 3 x 30	120
4009045	150	170	100	7	4 x 25 + 2 x 30	120
Application Technique	Compressed into gap/joint such that the multi-layers/banding are visible					
Note: The block/masonry/concrete walls and floors shall be at least 150mm thick and have at least the same fire rating as that required for the penetration seal. Block/masonry and concrete gap faces will be within the density range of 450 to 2300kg/m³ and gap faces will be free from loose or flaking material.						

Certifire Approval No CF 560

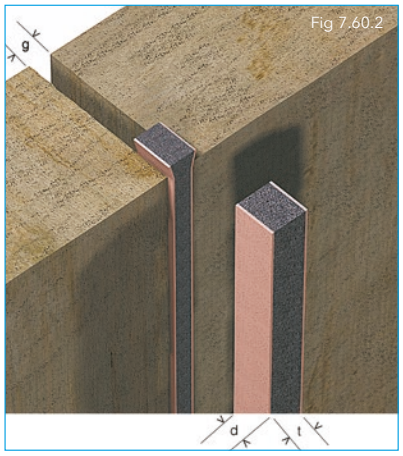

Detail 1 – Sealing movement joints at junction for walls.

LIVE DOCUMENT - CONTACT PROMAT FOR LATEST DETAILS OR REFER TO CERTIFIRE WEBSITE

Chapter 7: Penetration Seals

Promat PROMASEAL® UniCollar®

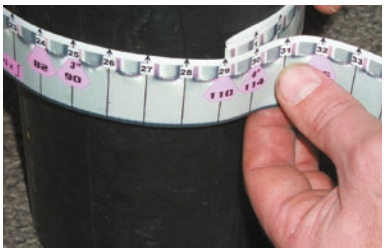

Detail A

Detail B

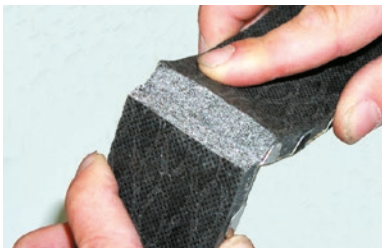

Detail C

Detail D

Detail E

Detail F

PRODUCT DESCRIPTION

Promat PROMASEAL® UniCollar® is a patented method of protecting plastic pipes which pass through fire rated walls and floors. The system is supplied in a boxed continuous strip, 2190mm long, which is simply cut to length on site, and attached to the wall or floor using clips (supplied), and suitable screws, bolts and anchors, if necessary.

APPLICATIONS

Promat PROMASEAL® UniCollar® is used to maintain the fire resistance of walls or floors when they are penetrated by combustible pipework made from uPVC, HDPE, PP and many other materials.

FIRE PERFORMANCE

Promat PROMASEAL® UniCollar® has been extensively tested in several countries to meet both national and international testing regimes, achieving fire resistance levels up to 240 minutes in walls and floors.

ADVANTAGES

- Fire tested up to 240 minutes in accordance with the principles of BS 476: Part 20
- Tested on a variety of pipe materials
- One product for pipe sizes from 43mm up to 200mm
- Packaged in single ordered box for lower inventory cost
- Continuous strip form
- Tools and fixings supplied
- Quick and easy to install

UNPACKING AND INSTALLATION METHOD

Detail A

Open box at contents lid. Pull out accessories. Pull out only enough Promat PROMASEAL® UniCollar® strip to protect the pipe in question.

Detail B

Lay a measuring tape on the intumescent face of the collar and cut it at marked measuring points according to the pipe size. The length required can also be determined using the chart provided and counting the segments or holding the strip around the pipe.

Detail C

Bend the intumescent side of the collar 2 or 3 times until it snaps.

Detail D

Shape the collar to fit the pipe and bevel the intumescent edge for close fit.

Detail E

Wrap the collar around the pipe and clip the first bracket into slots on both ends.

Detail F

Complete other brackets and fix the collar onto floor/wall.

Promat PROMASEAL® UniCollar®

INSTALLATION

Promat PROMASEAL® UniCollar® comes in a boxed strip. The length of collar can be gauged in several ways. Refer to chart as shown if the diameter of the pipe is known. If not, the circumference of the pipe can be found using a tape measure.

The strip of Promat PROMASEAL® UniCollar® is then fixed into place around the plastic pipe with metal restraining brackets (supplied) which are bolted or screwed into the surrounding surface.

DELIVERY FORM

Each box of Promat PROMASEAL® UniCollar® comprises of a 2190mm strip (146 segments) plus fixings.

The chart below shows the suggested length of strip required for each size pipe and how many casing segments to use. At the time of publication test data is available for pipe sizes up to 200mm.

Table 7l

Nominal pipe (mm)	43	50	55	63	69	75	83
Casing segments	15	17	18	20	21	22	24
Approx. collars per box	10	8	7	7	6	6	6

Nominal pipe (mm)	90	110	114	125	140	160	200
Casing segments	25	29	30	33	36	40	49
Approx. collars per box	6	5	5	4	4	3	3

TECHNICAL DATA

Up to 240 minutes fire rating, integrity in accordance with the principles of BS 476: Part 20: 1987.

1. Promat PROMASEAL® UniCollar®.
2. Concrete wall, floor and fire rated partitions.
3. Plastic piping e.g. Polyethylene (PE) Polyvinylchloride (PVC), Polypropylene (PP).
4. Attachment with suitable anchor fixing.

Fig 7.80.1

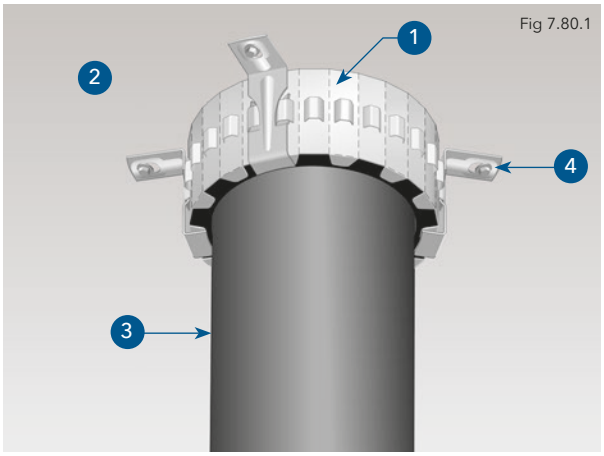

Installation Method – Floor penetrations

Fig 7.80.2

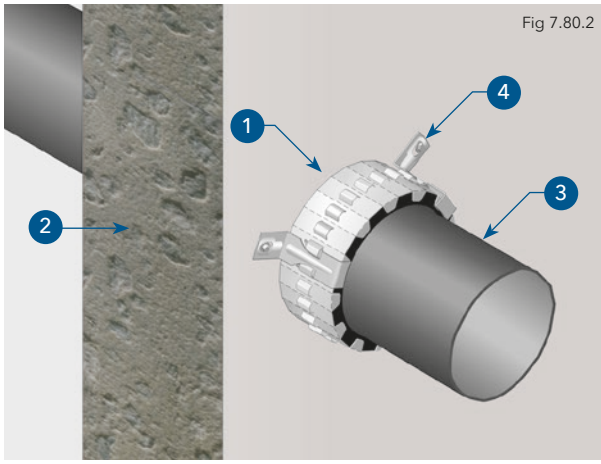

Installation Method – Wall penetrations

Fig 7.80.3

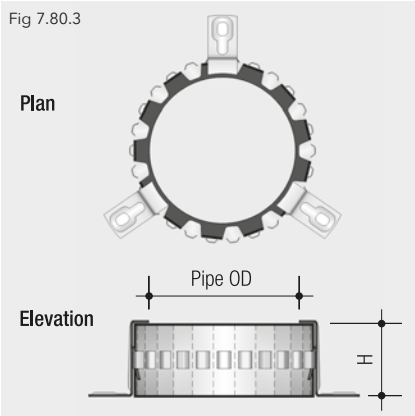

Detail 1 – Dimensions

Fig 7.80.4

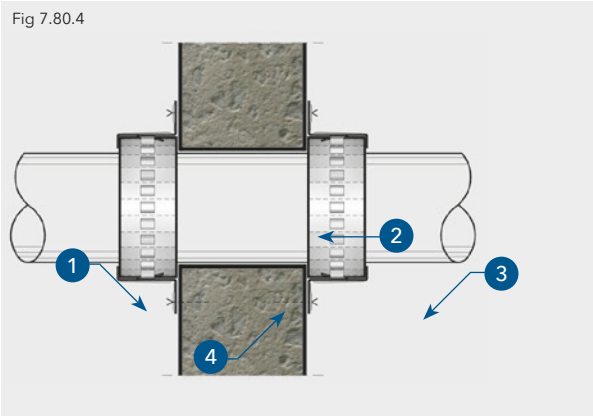

Detail 2 – Wall penetration

Assessment No: WFRA C91611b and WFRA 21818

A safety data sheet is available from the Promat Technical Services Department and, as with any other materials, should be read before working with the board. The product is not classified as a dangerous substance and so no special provisions are required regarding the carriage and disposal of the product to landfill. It can be placed in an on-site skip with other general building waste which should be disposed of by a registered contractor.

For HDPE pipes penetrating a 120mm thick concrete floor slab protected by one Promat PROMASEAL® UniCollar® on the exposed face.

Table 7m

Nom. pipe size (mm)	Wall thickness (mm)	Integrity (min)	Insulation (min)
40	3.5	240	180
56	3.5	240	180
63	3.0	240	180
75	4.0	240	180
90	3.5	240	180
110	5.0	240	180
125	4.9	120	90
150	6.2	120	90
150 *	6.2	240	180
200	6.2	120	120

** The penetration was protected by two Promat PROMASEAL® UniCollars both fitted on the exposed side.*

LIVE DOCUMENT - CONTACT PROMAT FOR LATEST DETAILS

For HDPE pipes penetrating a 120mm fire rated plasterboard partition protected by one Promat PROMASEAL® UniCollar® on each side.

Table 7n

Nom. pipe size (mm)	Wall thickness (mm)	Integrity (min)	Insulation (min)
40	3.0	180	180
50	3.0	240	180
63	3.0	180	180
90	3.5	240	180
110*	5.0	120	120
200	7.5	120	30

** The penetration was protected by one Promat PROMASEAL® UniCollar, on the exposed side only*

LIVE DOCUMENT - CONTACT PROMAT FOR LATEST DETAILS

For PP pipes penetrating a 120mm thick concrete floor slab protected by one Promat PROMASEAL® UniCollar® on the exposed face.

Table 7o

Nom. pipe size (mm)	Wall thickness (mm)	Integrity (min)	Insulation (min)
110	5.0	240	240

For uPVC pipes penetrating a 120mm thick concrete floor slab protected by one Promat PROMASEAL® UniCollar® on the exposed face.

Table 7p

Nom. pipe size (mm)	Wall thickness (mm)	Integrity (min)	Insulation (min)
40	2.2	240	240
50	2.5	120	120
50	2.7	240	180
65	2.8	120	120
80	3.2	120	120
100	3.2	240	180
150	4.2	180	120

LIVE DOCUMENT - CONTACT PROMAT FOR LATEST DETAILS

Assessment No: WFRA C91611b and WFRA 21818

For uPVC pipes penetrating a 120 minute fire rated plasterboard partition protected by one Promat PROMASEAL® UniCollar® on each side.

Table 7q

Nom. pipe size (mm)	Wall thickness (mm)	Integrity (min)	Insulation (min)
40	2.4	120	120
50	2.5	240	120
65	3.0	240	120
80	3.2	120	120
100	3.0	120	90
150	4.0	120	90

For HDPE pipes penetrating a 150mm thick concrete floor slab protected by one Promat PROMASEAL® UniCollar® on the exposed face.

Table 7r

Nom. pipe size (mm)	Wall thickness (mm)	Integrity (min)	Insulation (min)
40	3.5	240	180
56	3.5	240	180
63	3.0	240	180
75	4.0	240	180
90	3.5	240	180
110	5.0	240	180
125	4.9	120	90
150	6.2	120	90
150 *	6.2	240	180
200	6.2	120	120

** The penetration was protected by two Promat PROMASEAL® UniCollars, both fitted on the exposed side*

For uPVC pipes penetrating a 150mm thick concrete floor slab protected by one Promat PROMASEAL® UniCollar® on the exposed face.

Table 7s

Nom. pipe size (mm)	Wall thickness (mm)	Integrity (min)	Insulation (min)
40	2.2	240	240
50	2.5	120	120
50	2.7	240	180
65	2.8	120	120
80	3.2	120	120
100	3.2	240	180
150	4.2	180	180

LIVE DOCUMENT - CONTACT PROMAT FOR LATEST DETAILS

Assessment No: WFRA C91611b and WFRA 21818

For HDPE pipes penetrating a 170mm thick concrete floor slab protected by one Promat PROMASEAL® UniCollar® on the exposed face.

Table 7t

Nom. pipe size (mm)	Wall thickness (mm)	Integrity (min)	Insulation (min)
40	3.5	240	240
56	3.5	240	240
63	3.0	240	180
75	4.0	240	240
90	3.5	240	180
110	5.0	240	240
125	4.9	120	90
150	6.2	120	90
150*	6.2	240	180
200	6.2	120	120

** The penetration was protected by two Promat PROMASEAL® UniCollars, both fitted on the exposed side*

For uPVC pipes penetrating a 170mm thick concrete floor slab protected by one Promat PROMASEAL® UniCollar® on the exposed face.

Table 7u

Nom. pipe size (mm)	Wall thickness (mm)	Integrity (min)	Insulation (min)
40	2.2	240	240
50	2.5	120	120
50	2.7	240	180
65	2.8	120	120
80	3.2	120	120
100	3.2	240	240
150	4.2	180	180

Notes

GB ORDERLINE

For placing orders, delivery enquiries
and local stockists etc.
T: 0800 373 636
F: 01275 379 037
E: orderline@etexbp.co.uk

TECHNICAL SERVICES

For technical support and advice.
T: 0800 145 6033
E: technical.promat@etexbp.co.uk

RESOLUTIONS

For any problems with invoices or deliveries.
T: 01275 379 031 or 0800 373 636
E: customer.support@etexbp.co.uk

Etex Building Performance Limited
Marsh Lane, Easton-in-Gordano,
Bristol, BS20 0NE
T: 0800 373 636 F: 01275 379 037

promat.com

© 2022 Etex Building Performance Limited

V4 14/06/2022